K136K0MB,1,2,3,5,6,7,8
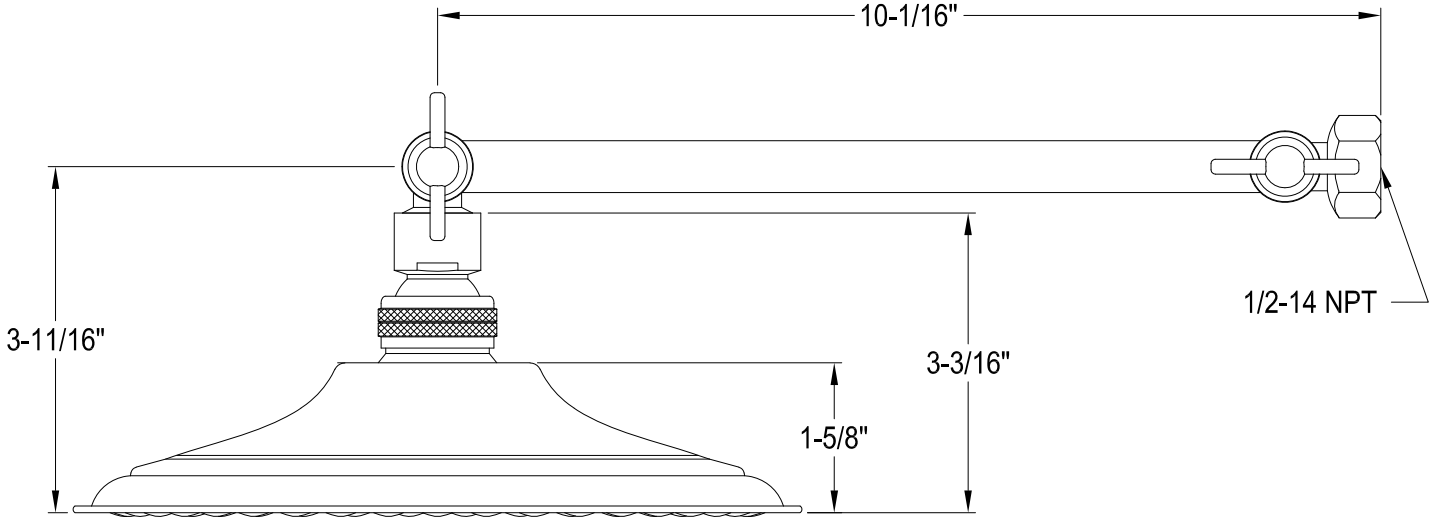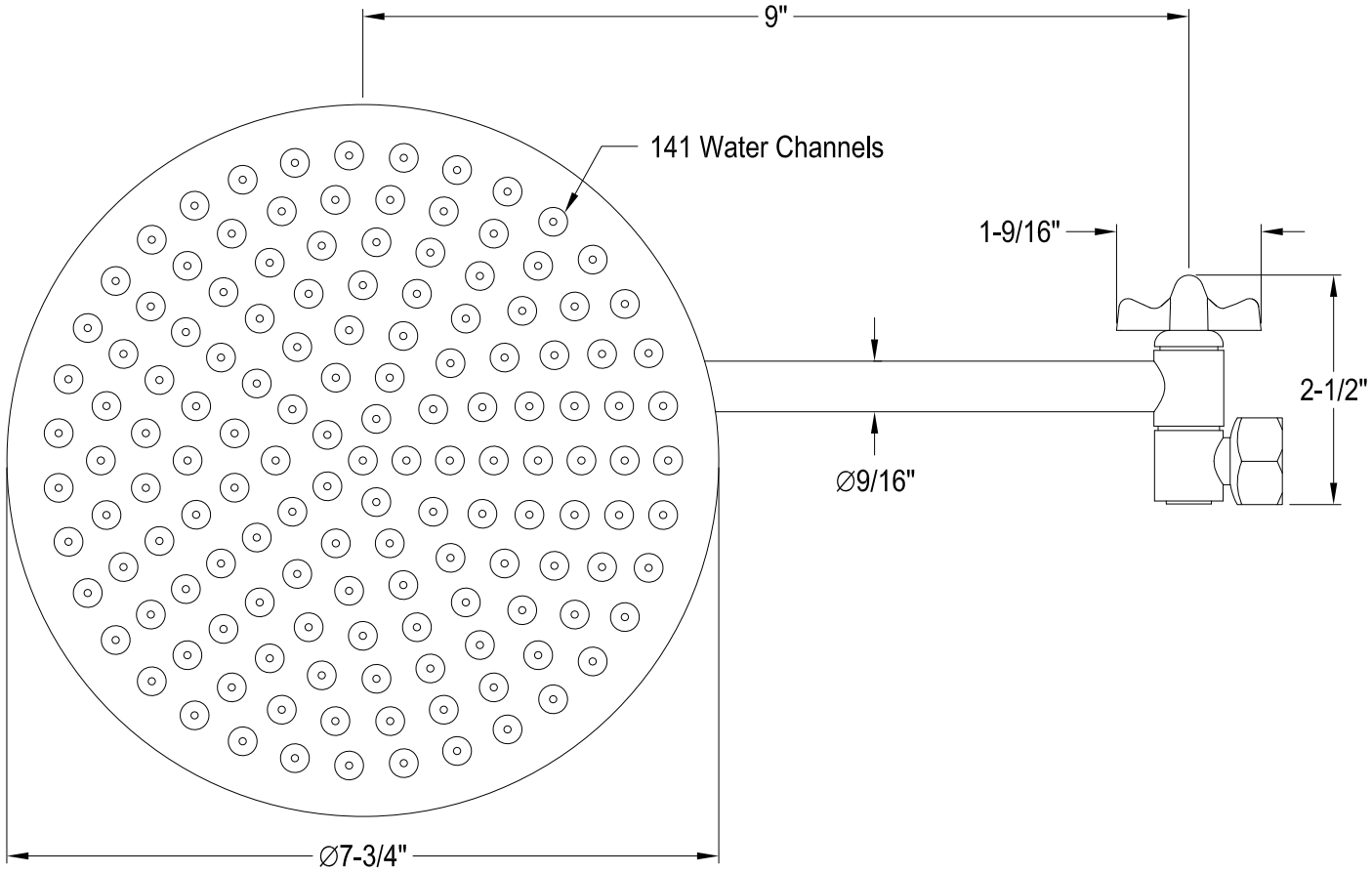
7-3/4" Diameter Brass Showerhead With 10" Shower Arm