KB4651,8CQL

Single Handle Pressure Balanced Tub & Shower Faucet

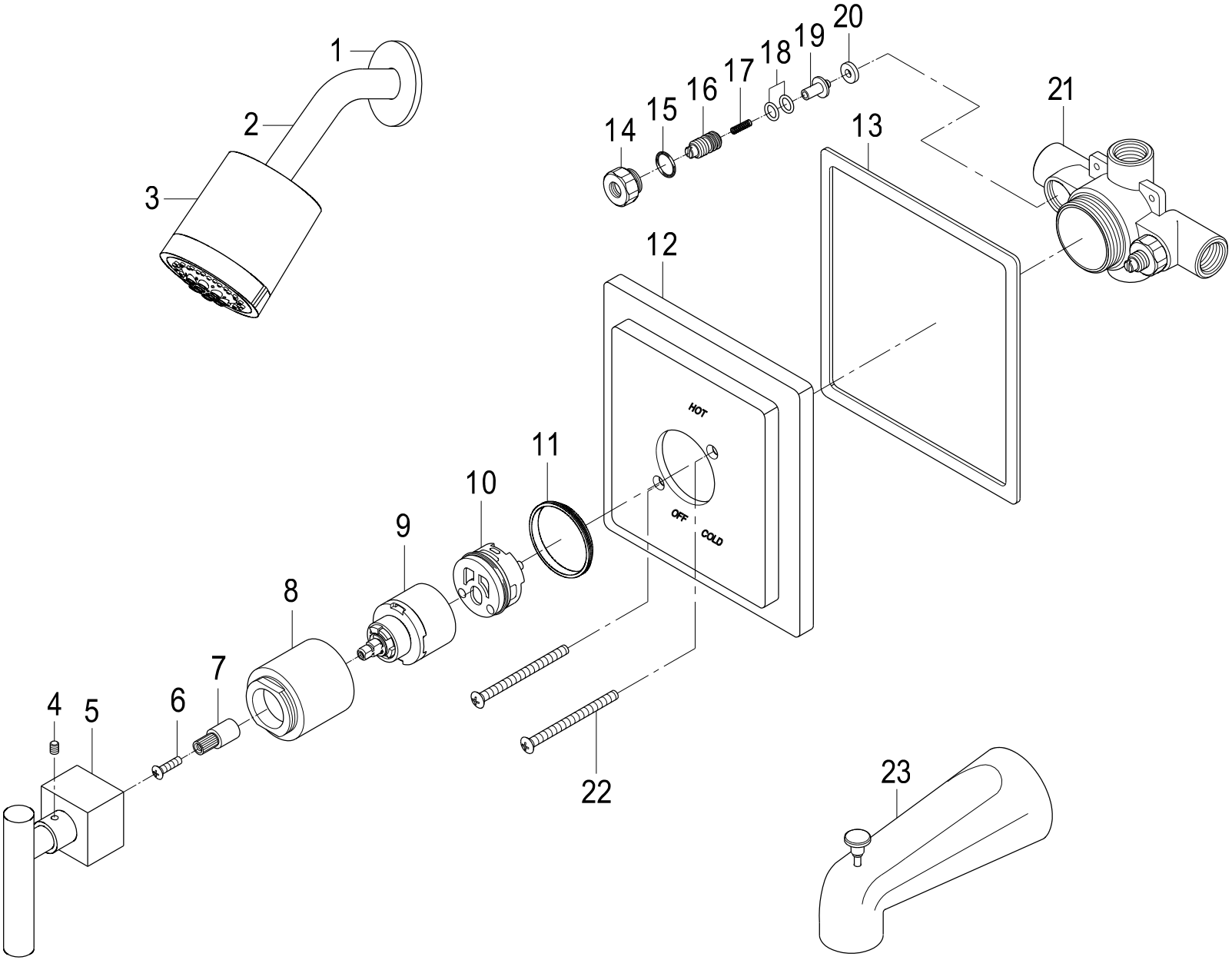

Ref# KB4651,8CQL | 2013-06-A