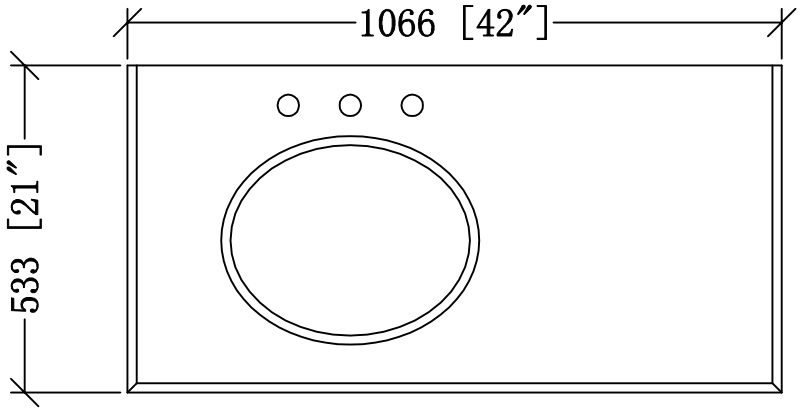
1066 [42″]
533 [21″]

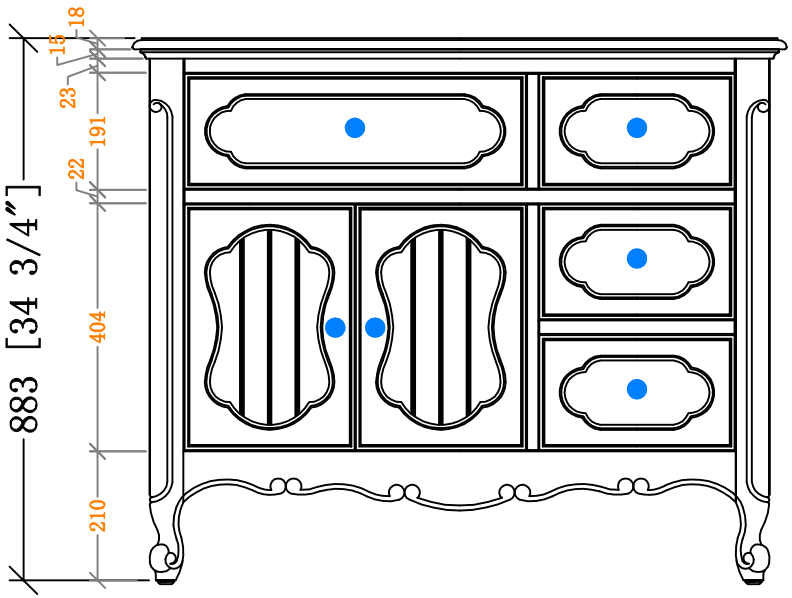
883 [34 3/4″]
18
13
23
191
22
404
210

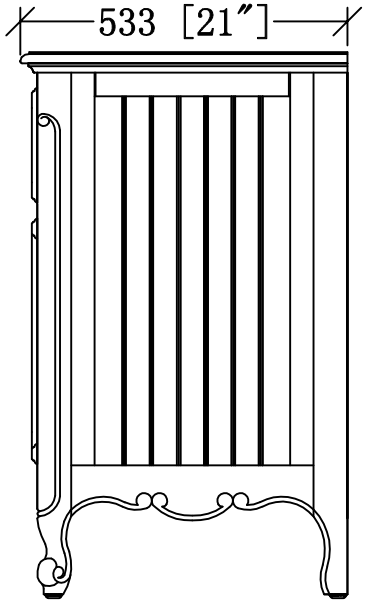
533 [21″]

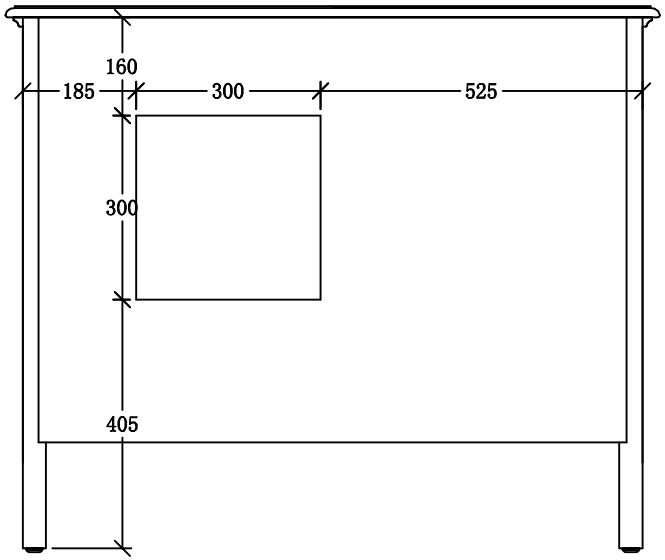
160
185
300
525
300
405

GD-1509-VS42