Vinnova Ecija Vanity Collection 702748

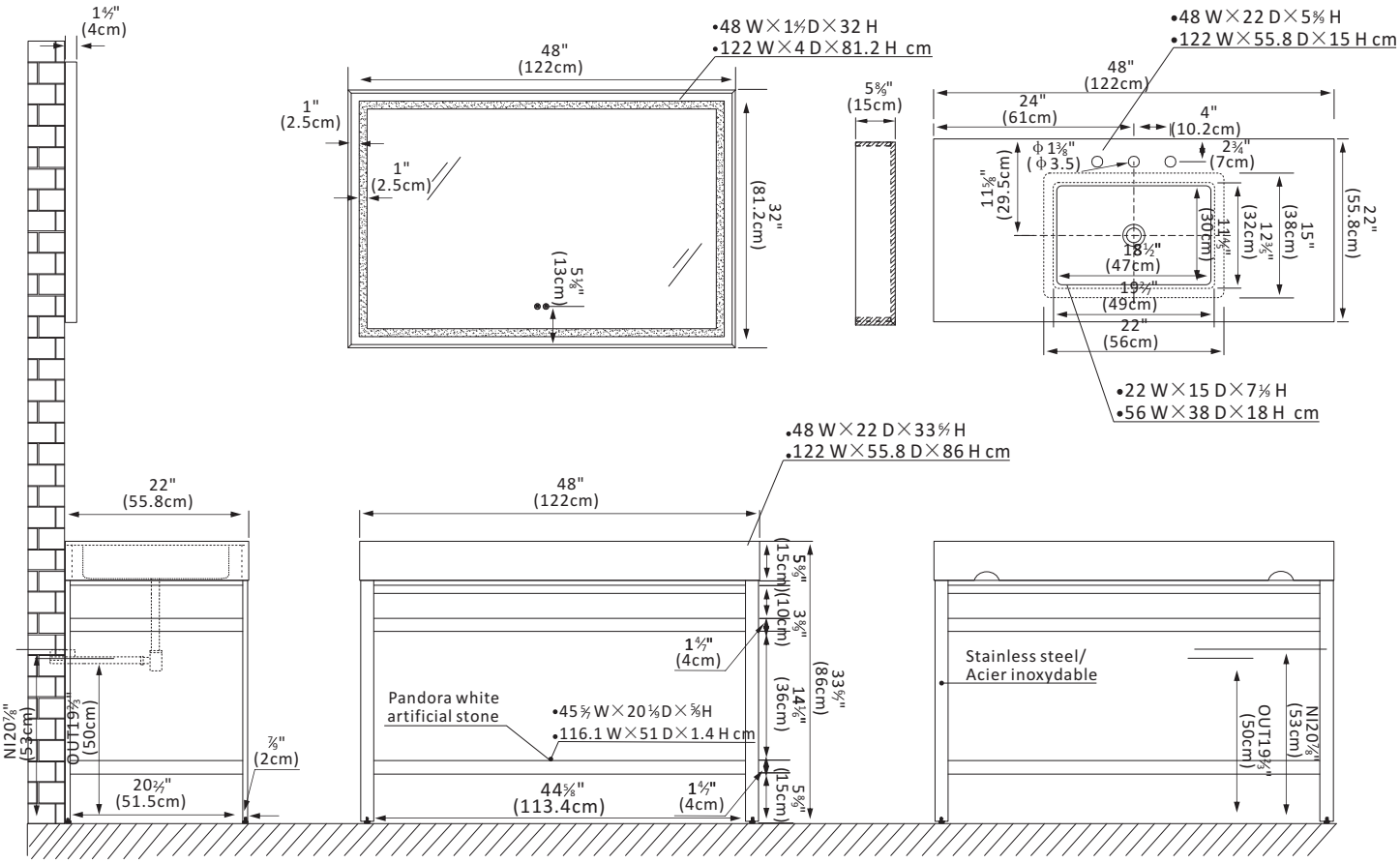

Features

●Material: Constructed of high-quality stainless steel and composite stone for superior durability and stability.

●Finish(s) Option: Structure base available in a stunning Brushed Gold or Matte Black finish to complement your décor.

●Top: 5.9”-thick Pandora white engineered stone top provides a clean and elegant look. With a high-gloss, anti-fouling coating, the countertop is scratch-resistant, wear-resistant, and easy to clean.

●Ample Storage Space (Drawer, Door and Shelf): Spacious open lower shelf provides ample storage. Includes a 1/2” storage shelf board.

●Hardware: Brushed Gold or Matte Black hardware finish lends a touch of opulent style and contrast.

●Basin: Bright white, rectangular, UPC-certified ceramic undermount sink with overflow blends seamlessly with the stone vanity top.

●Design: Single, rectangular LED mirror with aluminum frame coordinates perfectly with the vanity (mirror optional).

●Faucet Type: Countertop has pre-drilled, standard 8-inch widespread faucet holes.

●Installation Required: Freestanding bathroom vanity assembly required (no back panel).Designed for easy, no-hassle plumbing and faucet installation.

●Warranty: 1-Year Manufacturer Warranty—purchase with 100% peace of mind.

●Accessories: Does not include faucet, drain assembly, backsplash, or P-trap. Comes fully assembled and ready to install in your bathroom.

●Country of Origin: China

VINNOVA
FASHION BATHROOM LIFE