AM151ETL Component Struction
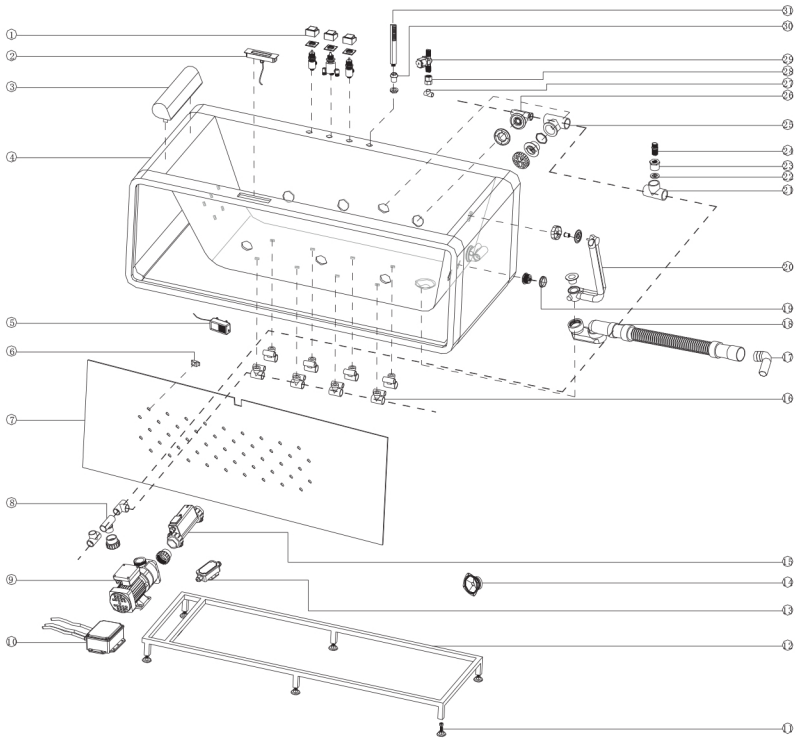
No.	Name	No.	Name
1	Three-piece faucet	19	Bottom light
2	PC board	20	Drain
3	Pillow	21	1 Inch three way
4	Bathtub	22	One way stuff
5	Ozone generator	23	Fitting nut
6	Skirt panel light	24	4CM conversion
7	Light installation panel	25	Suction
8	Lengthened plastic	26	Side jet
9	Water pump	27	½ Inch three way
10	PC board power box	28	Movable straight pipe
11	Bathtub leg	29	Drain valve
12	Stainless steel bracket	30	Hand shower holder
13	Junction box	31	Hand shower
14	Speaker	32	
15	Heater	33	
16	Back jet	34	
17	Drain elbow	35	
18	Deodorized drain	36