KB2631,2,5,8DLTO
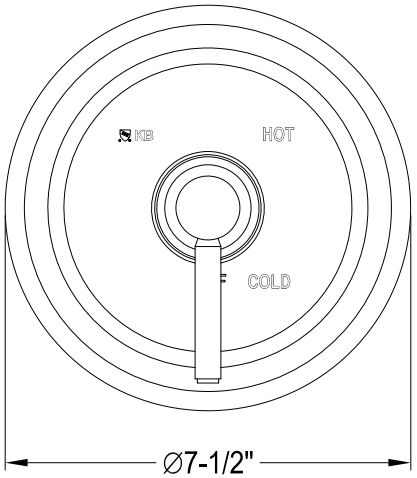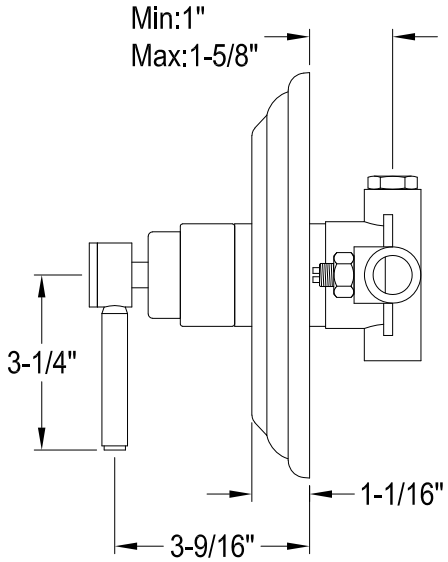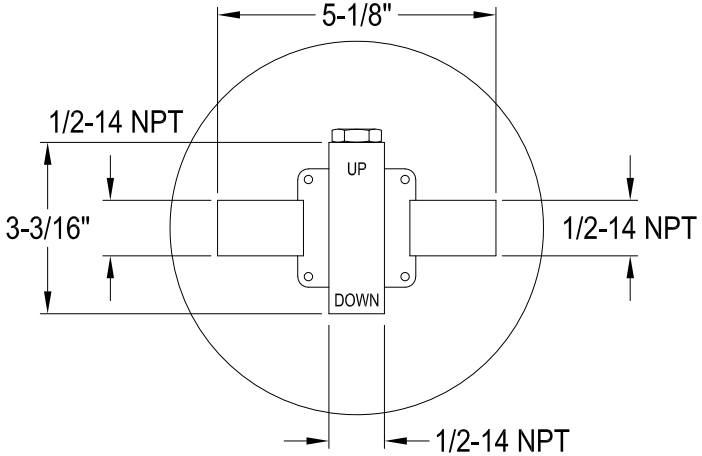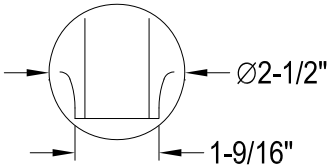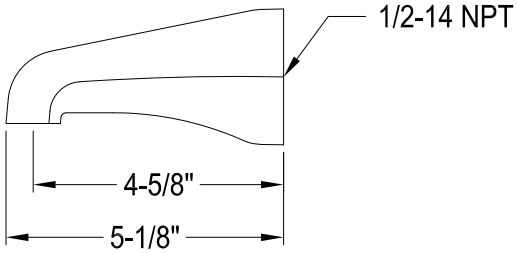
Single Handle Pressure Balanced Tub & Shower Faucet, Tub Only