Swiss Madison
well made forever

Concealed in-wall tank system 2'x4' for back to wall floor mount toilets

SM-WC324

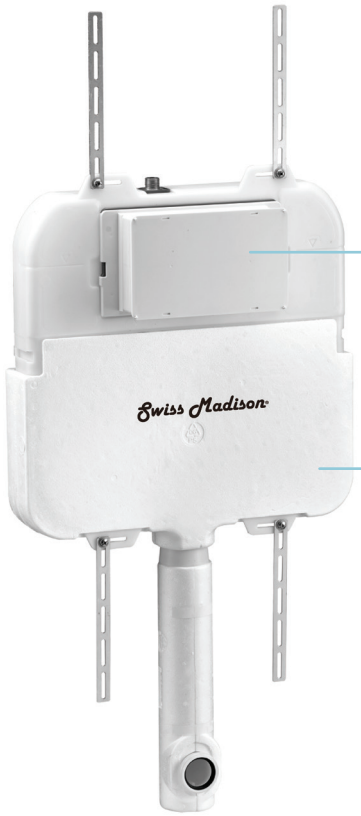

Features

- Large flush actuator plate opening for easy access to the inner tank and speedy valve
- Dual High Performance Gravity Flush System 0.8/1.6 (GPF)
- Insulated foam tank to prevent sweating & absorb noise
- Compatible with most standard back to wall toilet bowls and actuators
- Adjustable in-wall mount height installation

Specifications

- 0.8/1.6 Gallons Per Flush (GPF)
- Dual High Performance Flush System
- In-wall Mount
- One Year Limited Warranty
- Factory flush-tested
- ADA compliant
- **Product Weight:** 8 lbs.
- **L**: 19″ x **W**: 3.25″ x **H**: 31″

Required Components - *sold separately*

- Actuator (SM-WC001), (SM-WC002)
- Back to Wall Floor Mount Toilet Bowl (SM-WT514)
- Discharge pipe 2x4 (SM-CPT41)

Parts
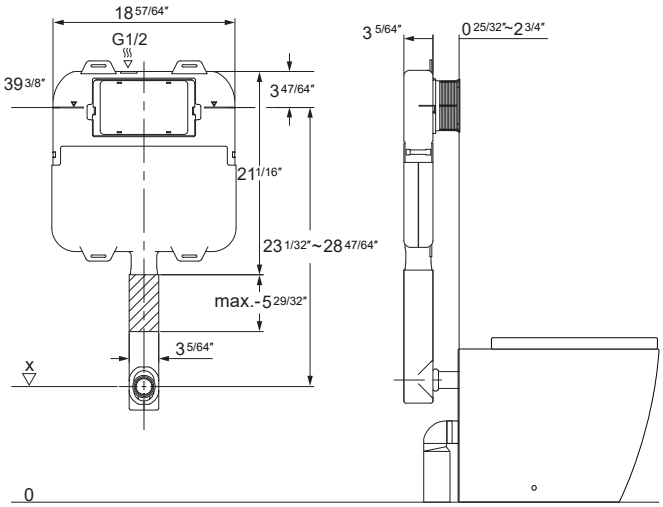
- SM-WC001 / SM-WC002 : Actuator
- SM-CPT53 : Black sponge bar silicone oil
- SM-CPT41 : Discharge pipe 2x4
- SM-CPT46 : Mounting box 2x4
- SM-CPT42 : Pipes inlet/outlet 2x4
- SM-CPT51 : Plastic pins
- SM-CPT44 : 4pcs bolt 2x4