Vinnova Inc.

INSTALLATION SPECIFICATION

Model No.	816024R-LED-GF
Description	LED Mirror
Overall Dimensions	24"x32'' x 1.5''
LED light	CCT 3000K/4000K/6000K
Standard	110V,IP44 rated
Net weight(LBS)	18.5
Mirror Certification	ETL
Mount Type	Wall Mounted
Orientation	Horizontal and Vertical
Power Source	Hardwired right out of the box
Touch-Sensitive	Yes

All measurements are approximate.Measurements may vary +/-1/2".

Piceno

24"x32"

LED Bathroom Mirror

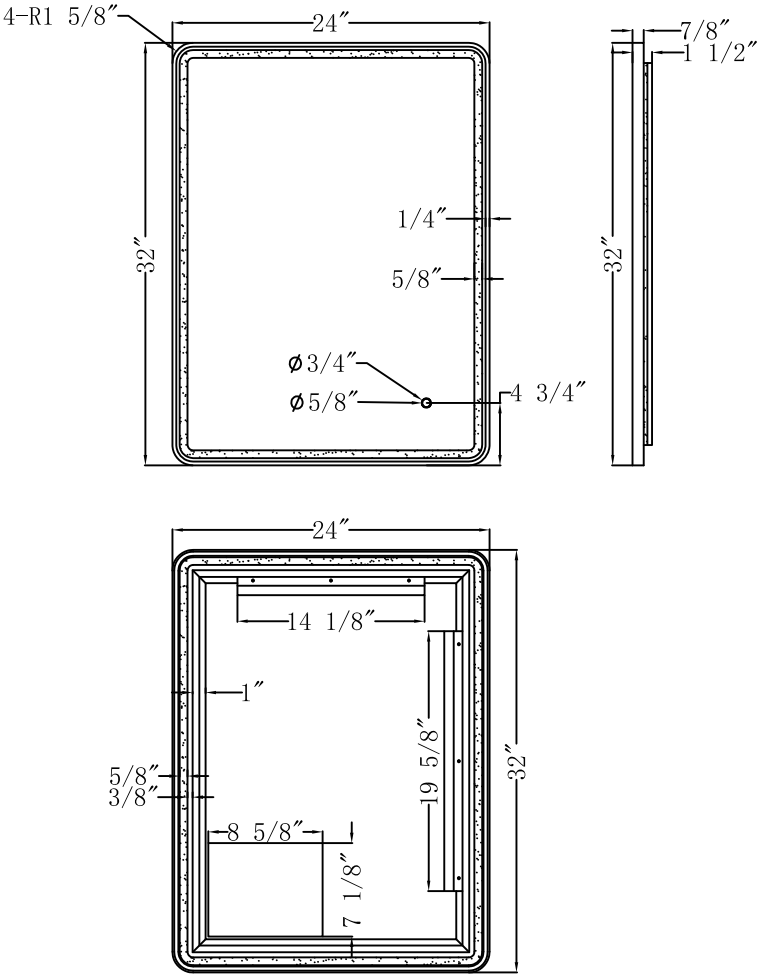

VINNOVA
FASHION BATHROOM LIFE

www.vinnovadesign.com