CALHOME

Elegant Design Meets High Function

03-30" Collection

DIY Barn Door Assembly Instructions

Email: service@t-motorsports.com

CAREFULLY READ ALL INSTRUCTIONS BEFORE INSTALLING

Step 1 Tools Needed

You will need a Pencil, Phillips head screwdriver,Tape measure, Drill, 7/16" Assorted Drill bits, 6" Phillips head bit and 1/2" socket ratchet, 4ft Level,Rubber mallet, Safety glasses, 4 Clamps(6") and 2 Clamps(50").

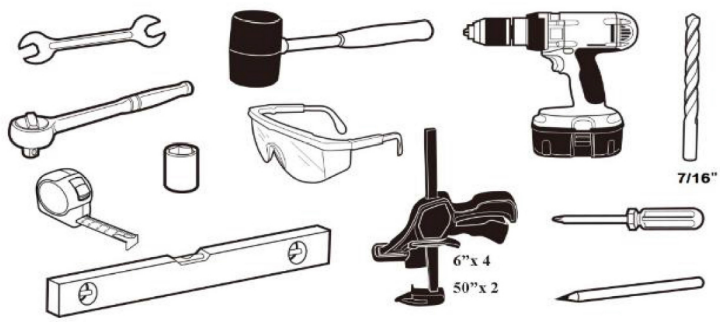

Step 2 Parts Included

Make sure ALL parts are included before installing.
1 Top Plank, 1 Bottom Plank, 1 Left Outside Plank,
3 Middle Planks.1 Right Outside Plank ,
1 Central Plank, and 36 Screws.

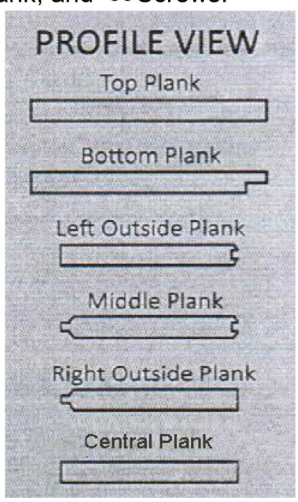

Step 3 Expanded View

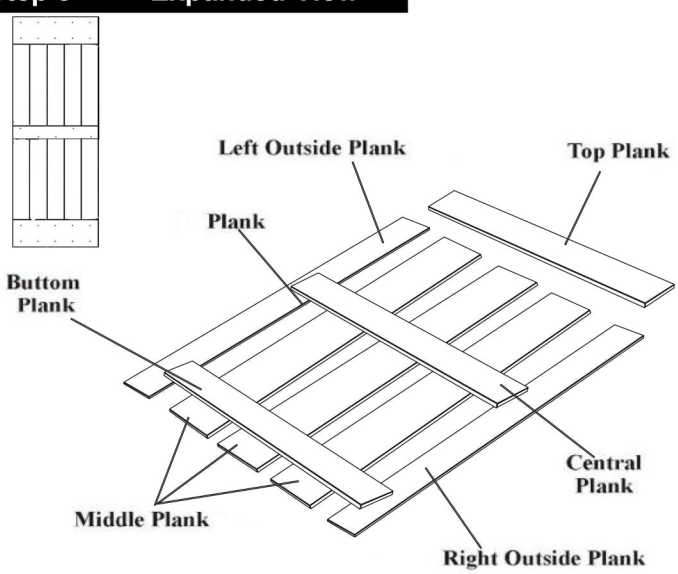

Step 4 Assemble Door Middle and Outside Planks

Place one plank flat on your work surface, making sure the groove side of the panel is to the inside. Take next plank and place it evenly into the first plank's groove. Repeat steps with the remaining planks. Make sure all planks are aligned top and bottom as you go. Planks should be evenly spaced and snug. The smooth outer edge of the left and right end planks should be placed to the outside.

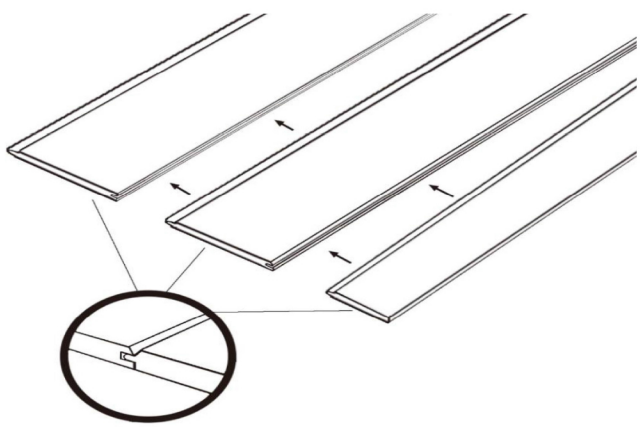

CAUTION

Assembled door is heavy and should be lifted by 2 people at all times.Mishandling of heave objects (i.e. doors) may cause injury. Safety shoes should be worn at all times to prevent injury.

Step 5 Assemble Top and Bottom Planks

Place the top and bottom planks onto the assembled door planks with the pre-drilled opening side up. Make sure both panels are flush with the door edges on top and sides. There should not be any overhang. Planks should be evenly spaced and snug. Do not insert any of the screws at this point.

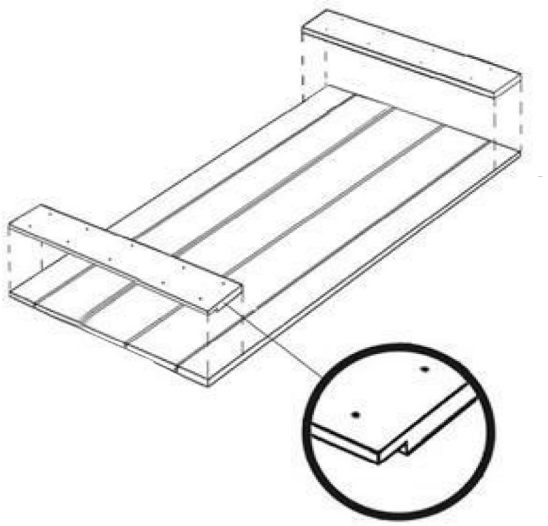

Step 7 Secure Top and Bottom Planks

Once all planks are flush and squre, secure the top and bottom planks with the screws provided. Using the clamps, secure all 4 corners. With the pre-drilled holes as your guide, drill(1/8"bit) a shallow pilot hole into 4 corner holes. Do not drill completely through the door plank.Using a screw driver insert screws into the 4 corner pre-drilled holes. Continue process with the remaining screws. Make sure all screws are installed and secure. It is important to check that all planks are still flush and squre as you go.

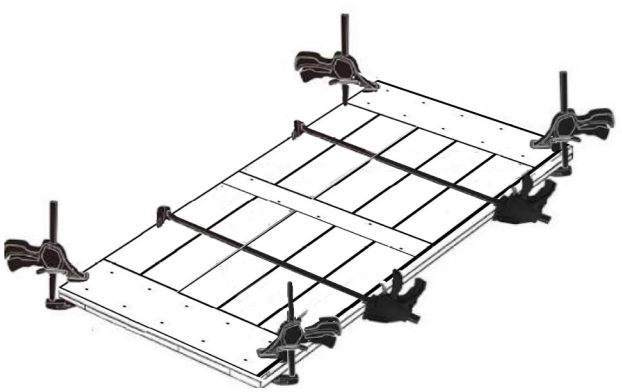

Door Color

36A = 266260 GOLDEN PECAN 20066 22051
36B = 266167 DARK WALNUT 20066 22002
36C = 266256 EBONY 20066 22047

Step 6 Central Plank

Place the **Central** plank onto the door with the pre-drilled opening.

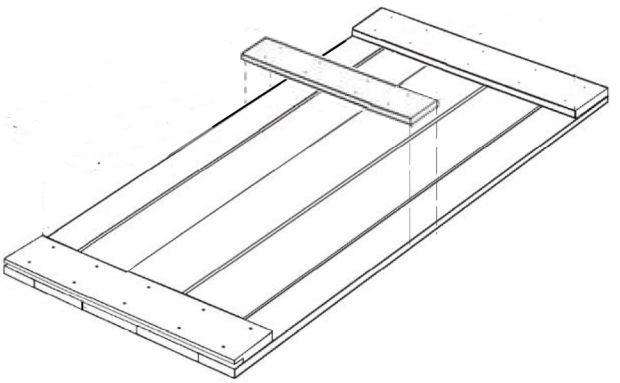

Step 8 Secure the Cross Plank

Once the top and bottom planks are installed, drill shallow pilot holes in door planks through diaganol cross plank(using the pre-drilled holes as a guide) and then with a screwdriver, secure with the screws provided. Do not drill completely through the door plank. It is important to check that the plank is still flush as you go.

Step 9 Install Sliding Door Hardware

The door is now ready to have the sliding door hardware track brackets installed
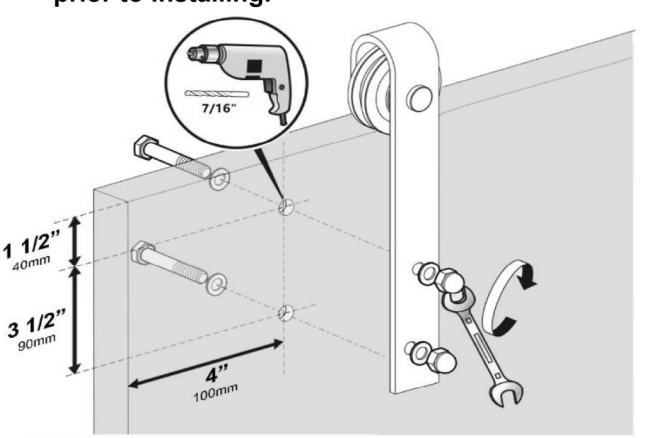
Note: The below guide is for our SDH-SWD11 hardware. If using the wood barn door track included in the kit, please refer to the provided hardware installation instructions prior to installing.