JUL-22-6

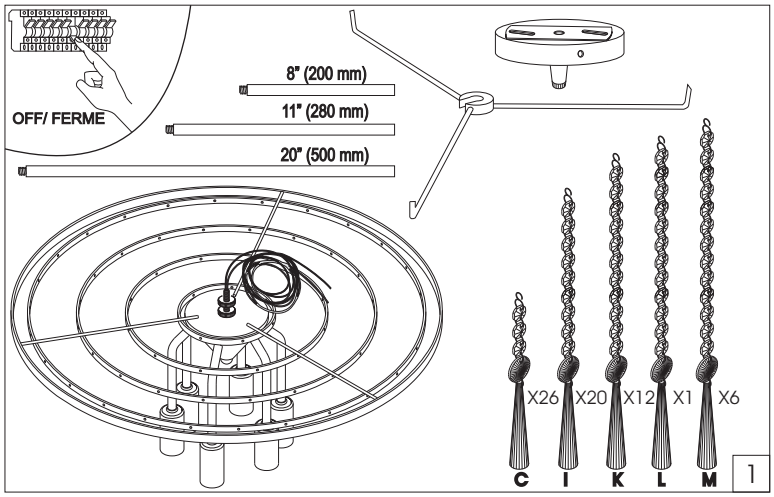

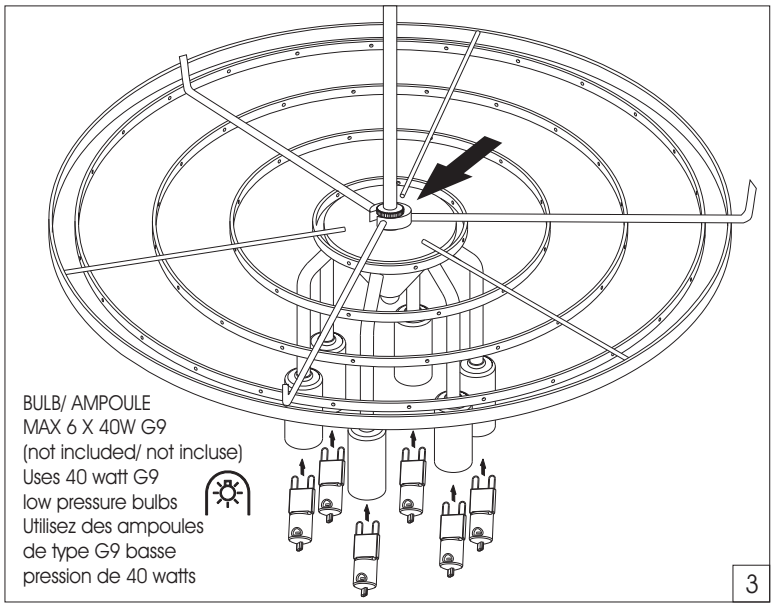

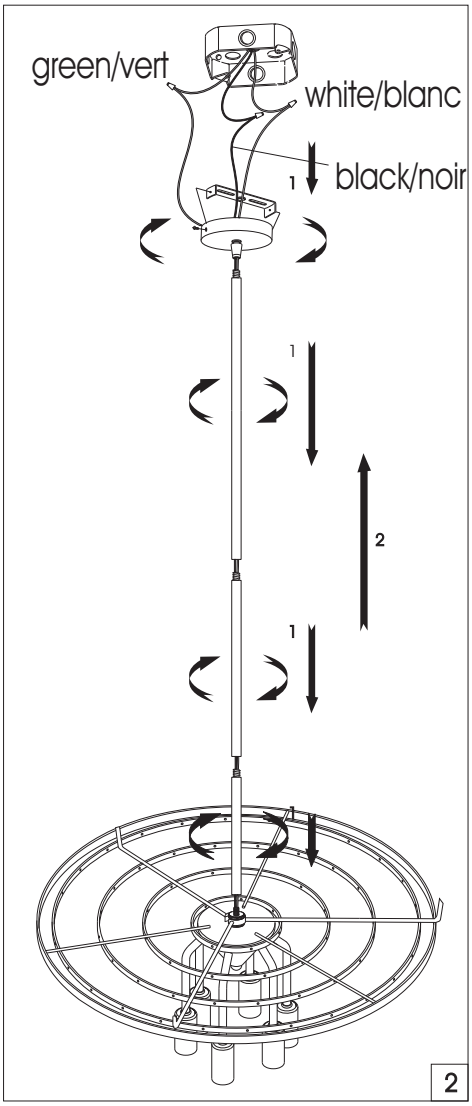

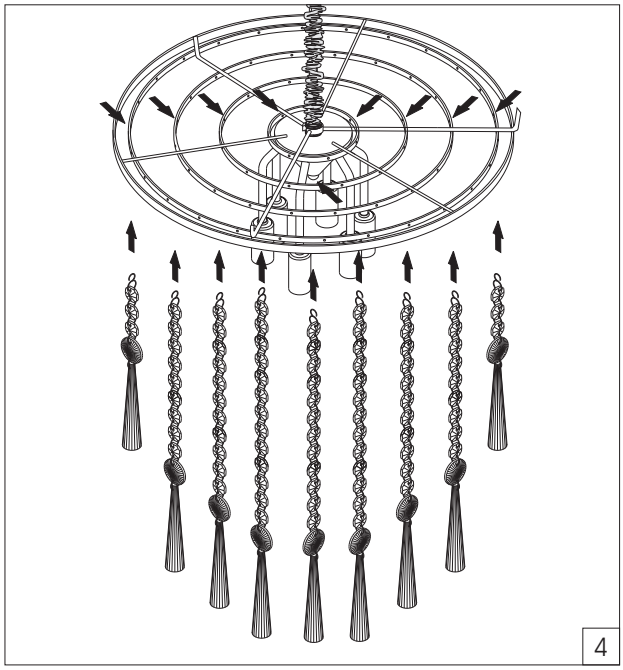

1401 Courtneypark Drive East, Mississauga, Ontario, Canada, L5T 2E4,
Tel: 905.564.1262 Fax: 905.564.1299 E-mail: dainolite@dainolite.ca
Web: www.dainolite.ca

FEB 2012