KB1791,2,3,5,6,8,9PLLS
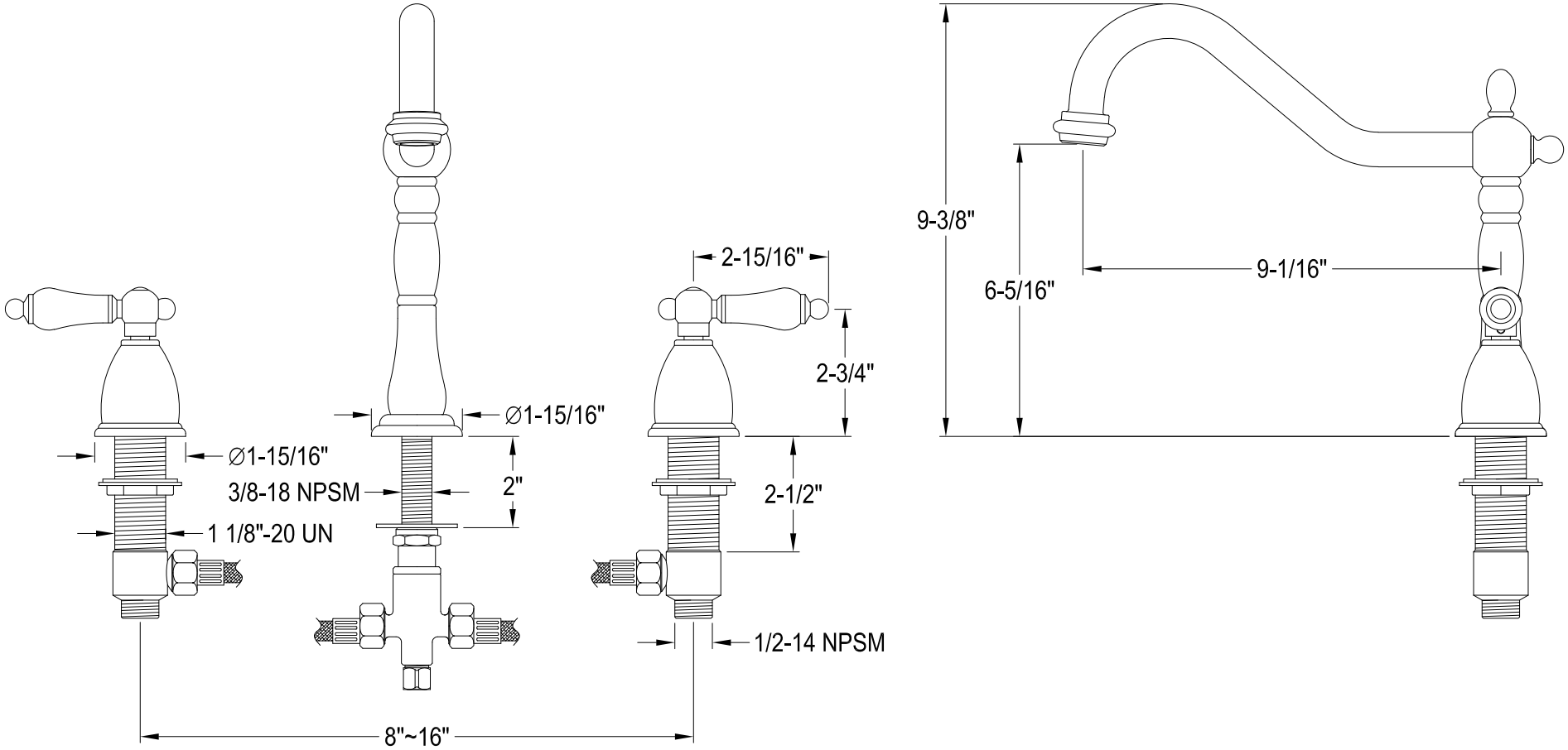
Widespread Kitchen Faucet