# CC2006T1,CC2005T2,5,8
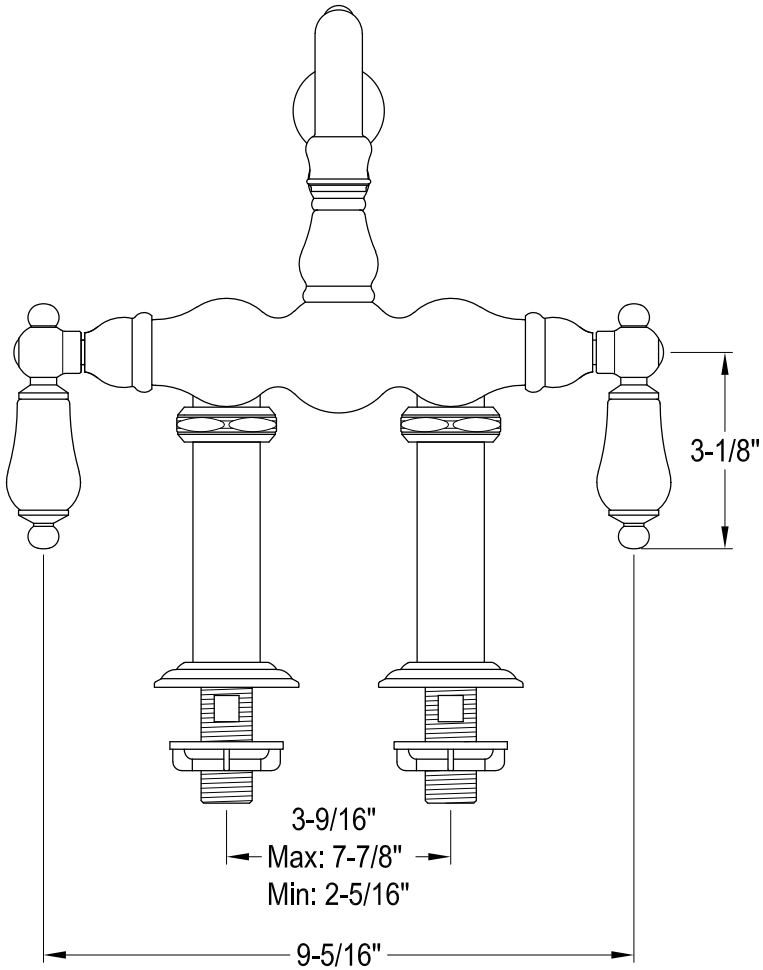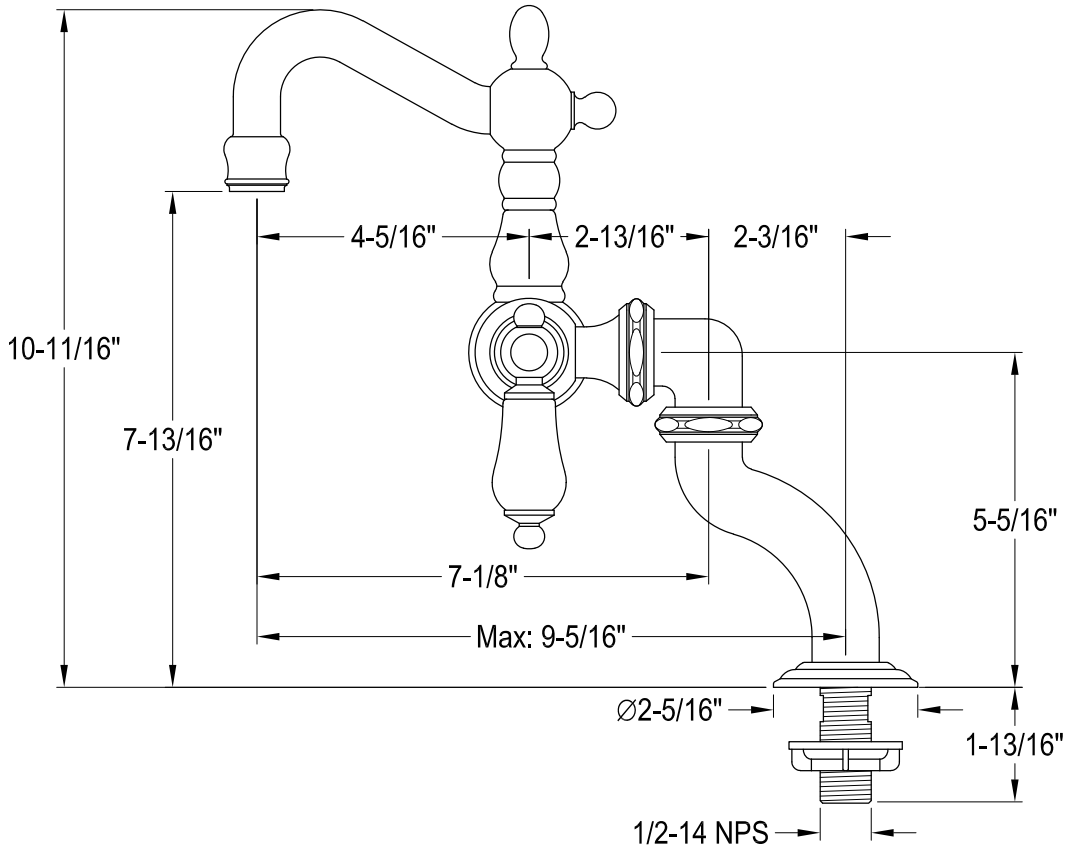
Deck Mount Tub Filler