ANCONA
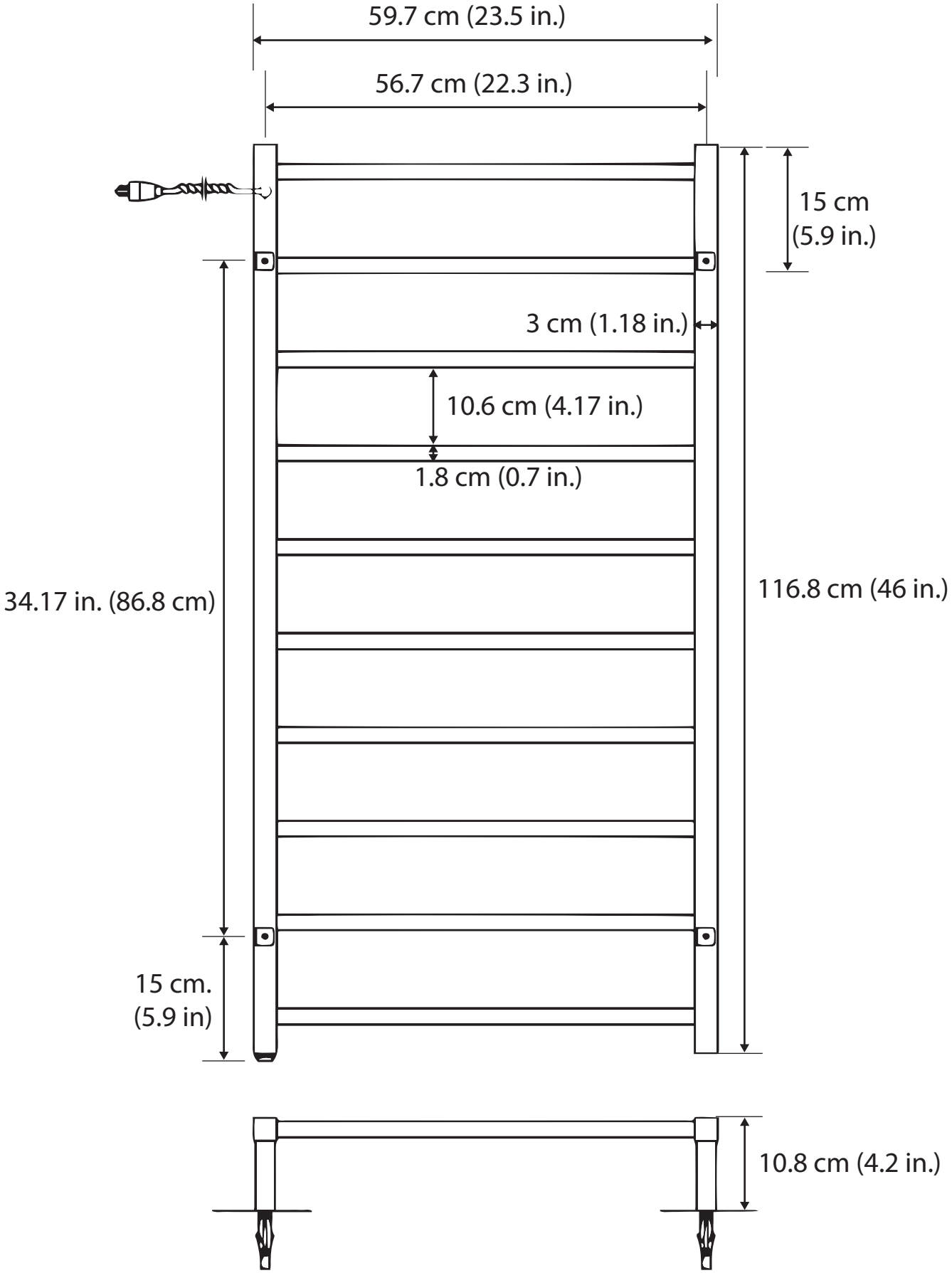
Gala Dual Brushed with Timer