zuiver

JEAN 1-seater; 2,5-seater

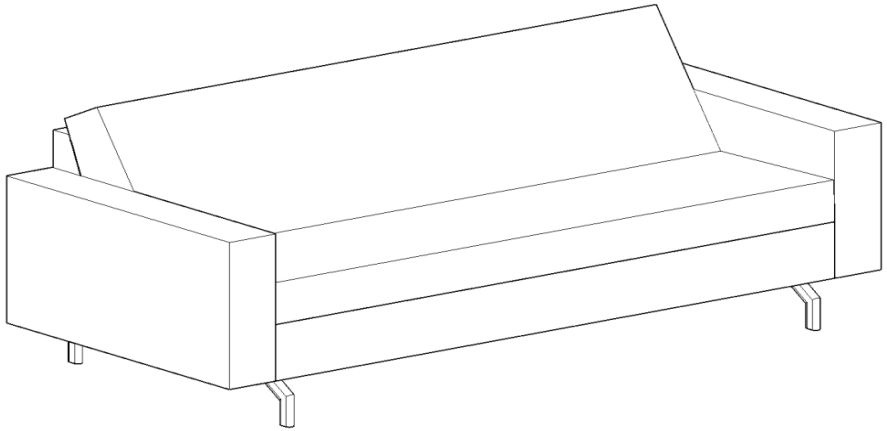

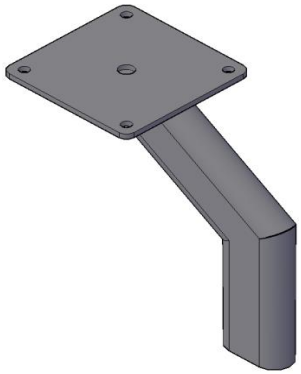

Leg x4

(4x50) x16