CC78T1,CC77T2,5,8
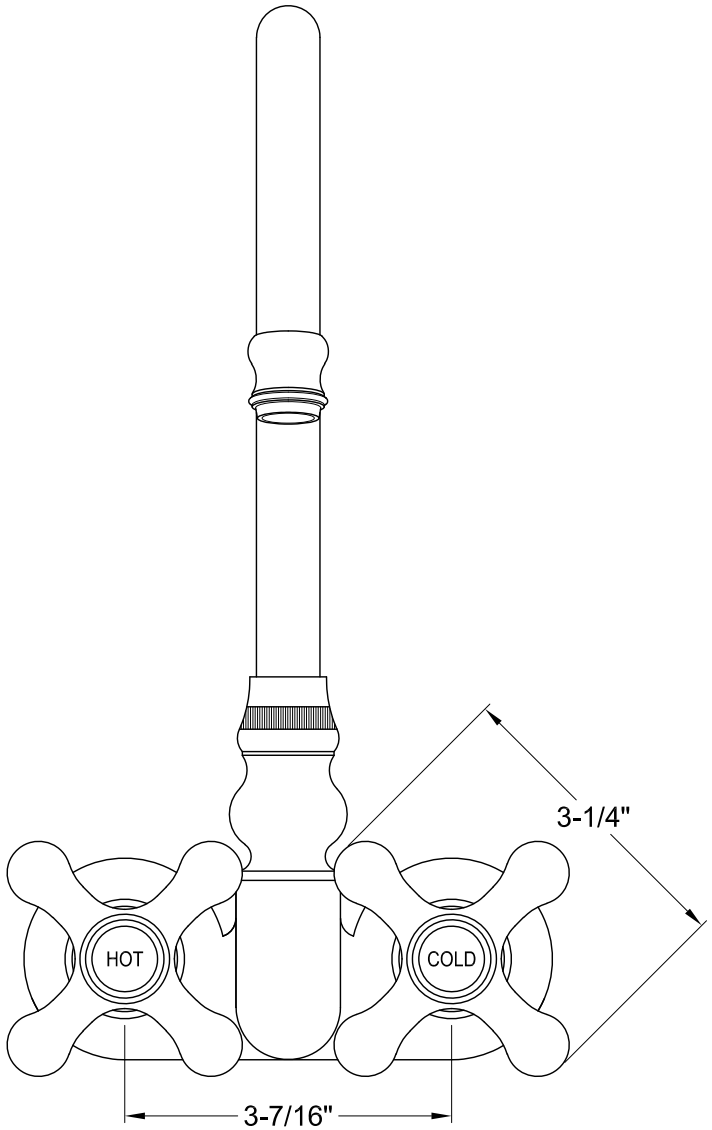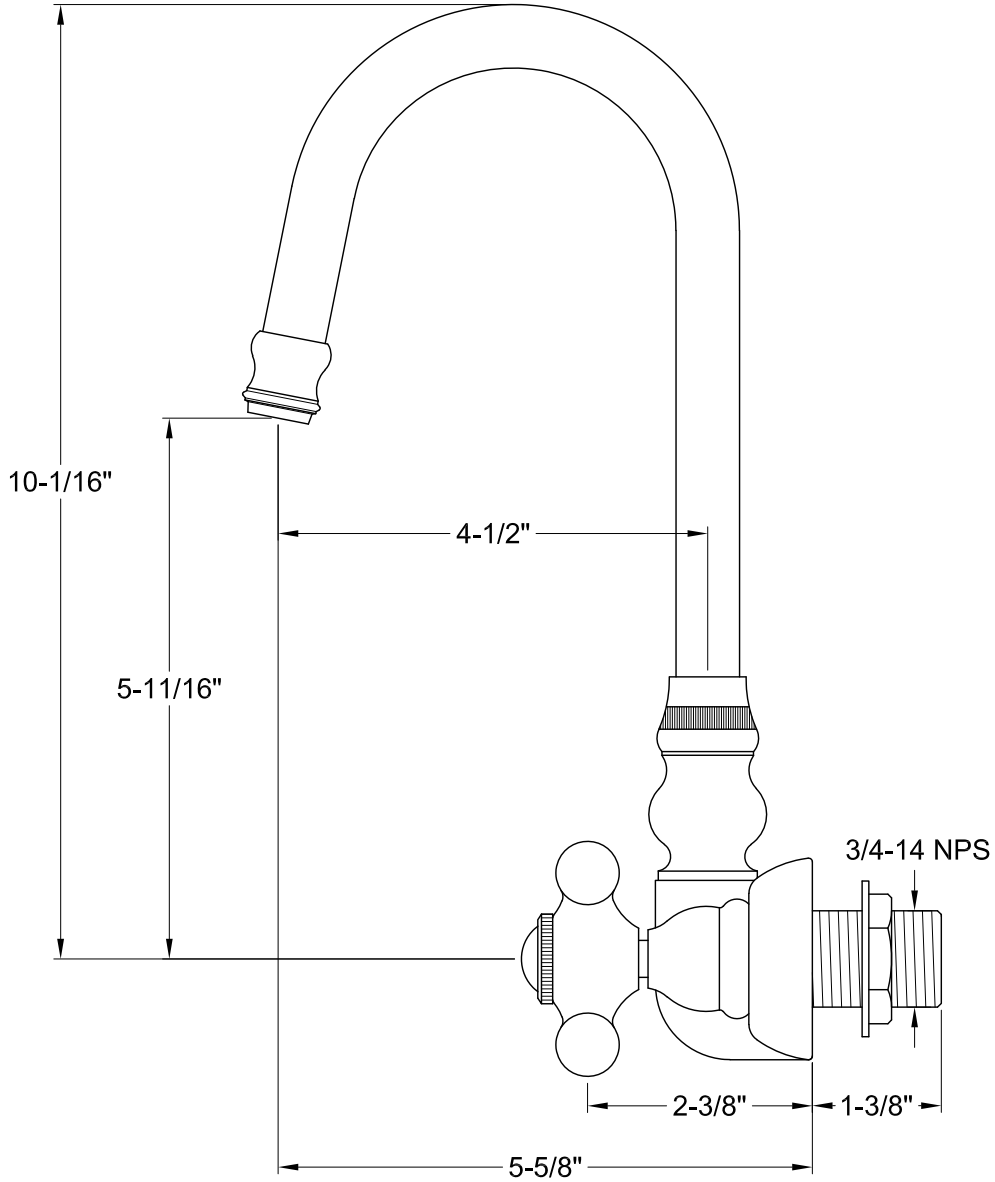
Wall Mount Tub Filler