SCC8391,5,8

Pedestal Towel Holder With Double Towel Bar

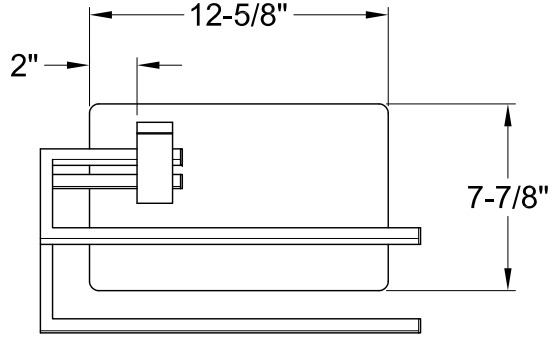

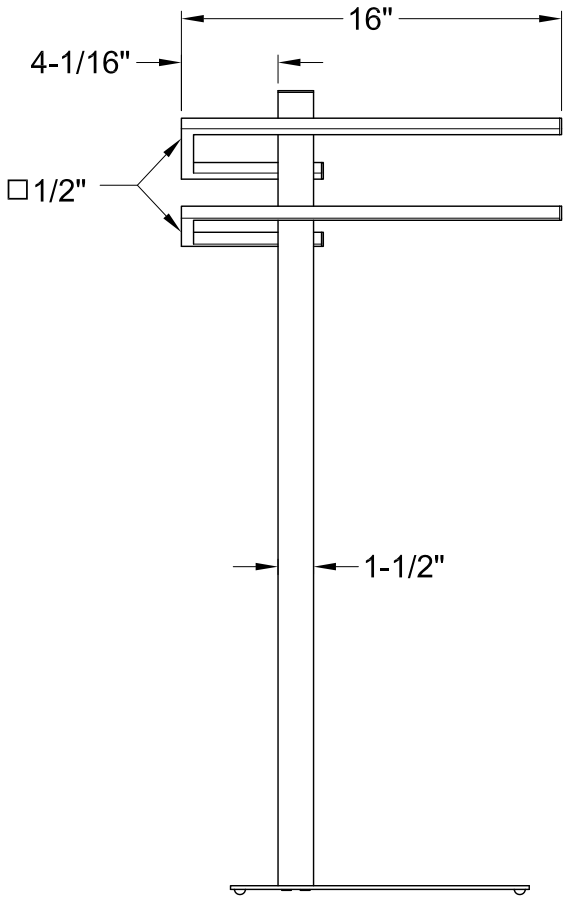

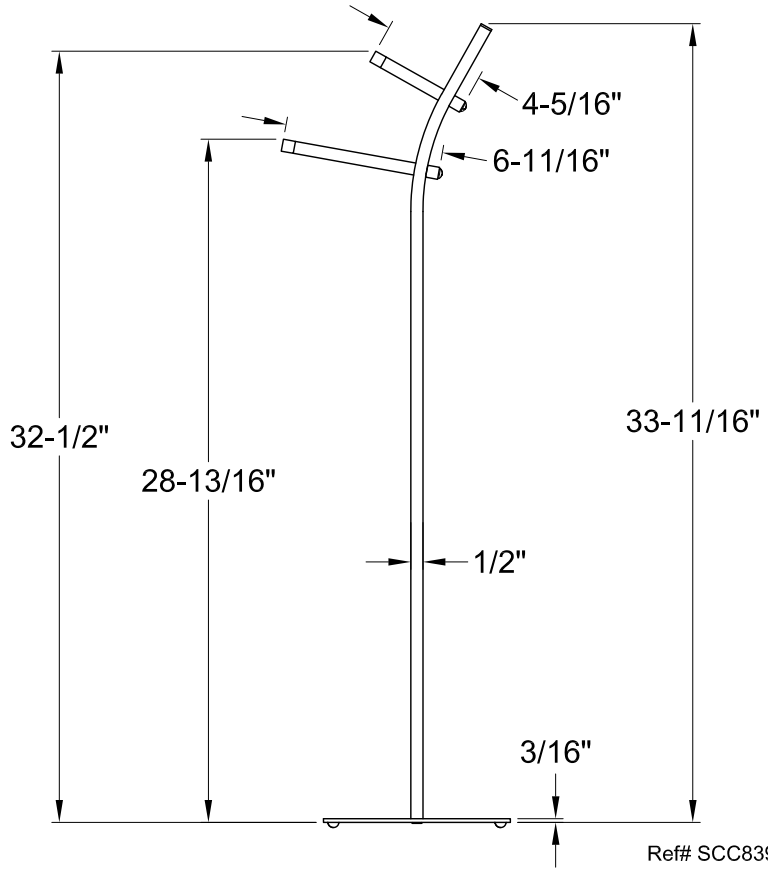

Ref# SCC8391,5,8 | 2018-10-A