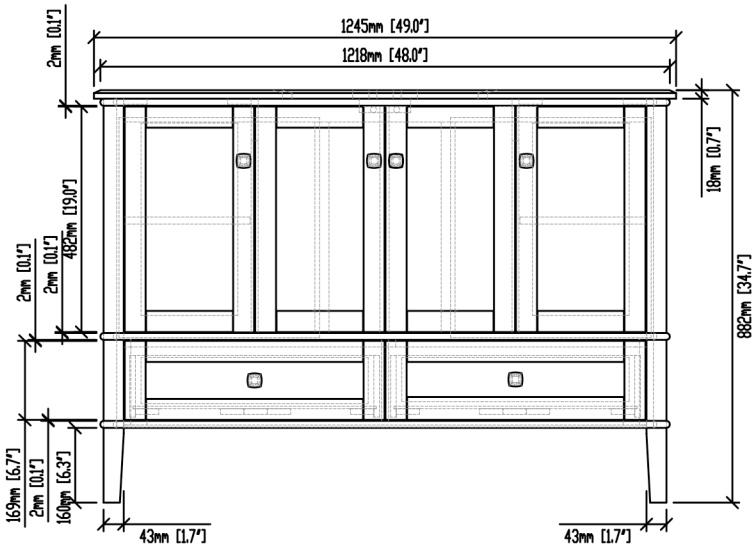
1245mm [49.0"]
1218mm [48.0"]
2mm [0.1"]
482mm [19.0"]
2mm [0.1"]
2mm [0.1"]
18mm [0.7"]
882mm [34.7"]
169mm [6.7"]
2mm [0.1"]
160mm [6.3"]
43mm [1.7"]
43mm [1.7"]

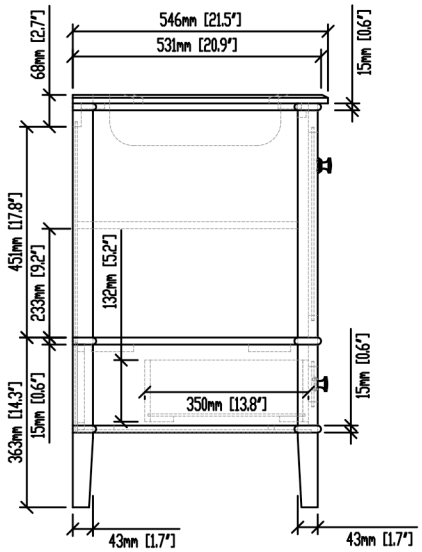
546mm [21.5"]
531mm [20.9"]
68mm [2.7"]
15mm [0.6"]
451mm [17.8"]
233mm [9.2"]
132mm [5.2"]
15mm [0.6"]
350mm [13.8"]
363mm [14.3"]
15mm [0.6"]
43mm [1.7"]
43mm [1.7"]

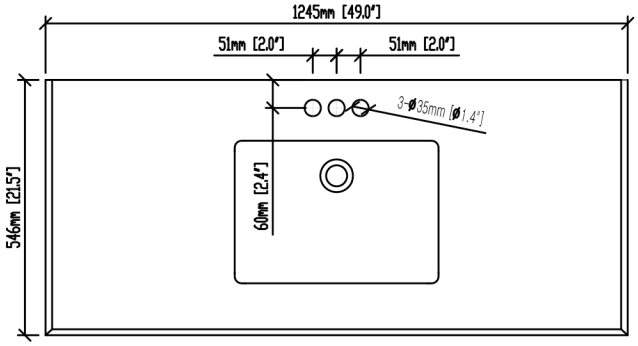
1245mm [49.0"]
51mm [2.0"]
51mm [2.0"]
3-Ø35mm [Ø1.4"]
60mm [2.4"]
546mm [21.5"]

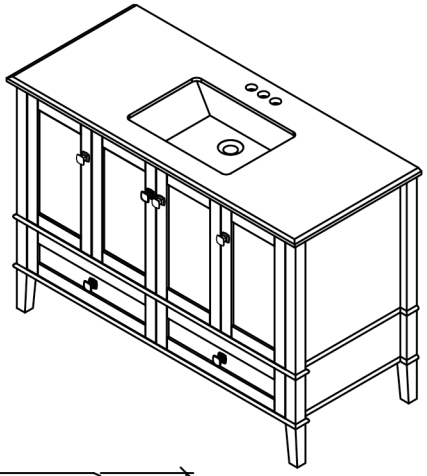

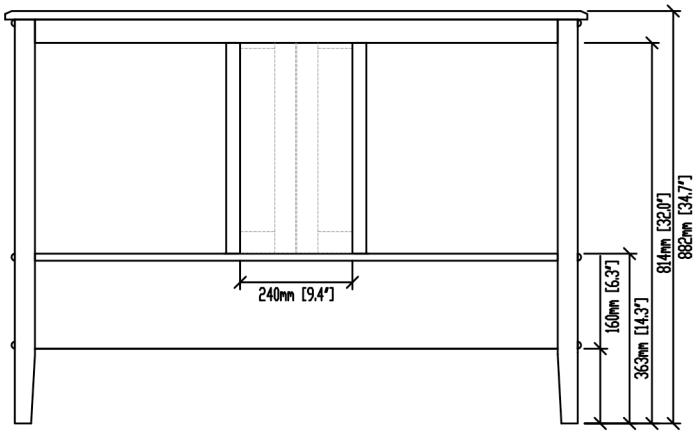
240mm [9.4"]
814mm [32.0"]
882mm [34.7"]
160mm [6.3"]
363mm [14.3"]