Ancerre DESIGNS

VTS-KAYLEIGH-60

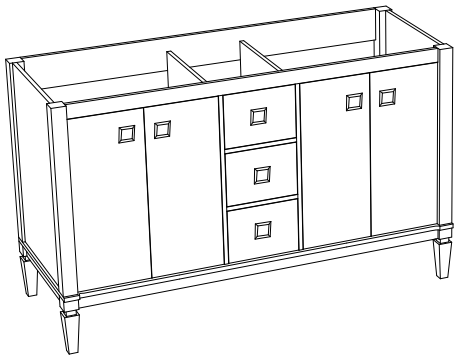

Features:

Solid Wood & Hardwood Construction
3 Soft-close Drawers
4 Soft-close Doors
Brushed nickel hardware
Adjustable leg levelers
cUPC Undermount Basin

Dimensions

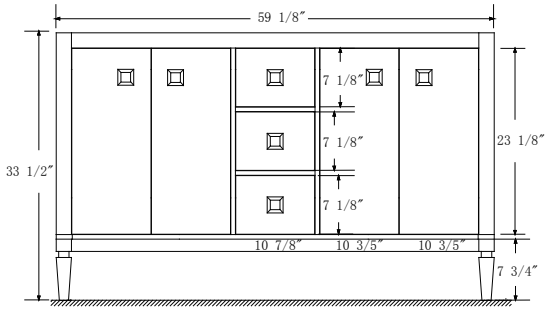

Front

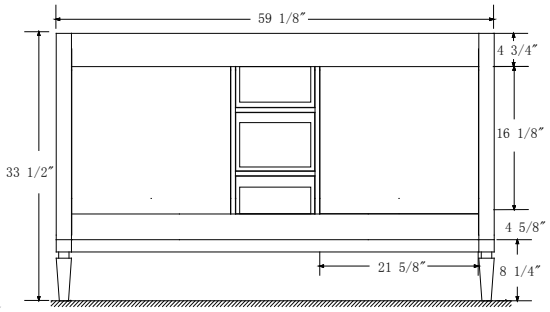

Back

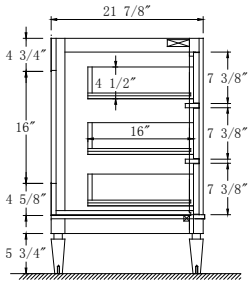

Side

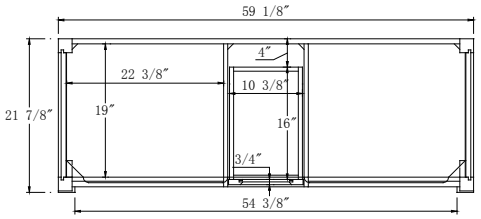

Top

Dimensions:

60''×22''×34 1/4'' (With Top)
59 1/8''×21 7/8''×33 1/2'' (Vanity Only)

Vanity Finish:

White (W)
Sapphire Gray (SG)

Countertop:

Italian carrara white marble (CW)

Certification:

CARB P2

Countertop & Sink

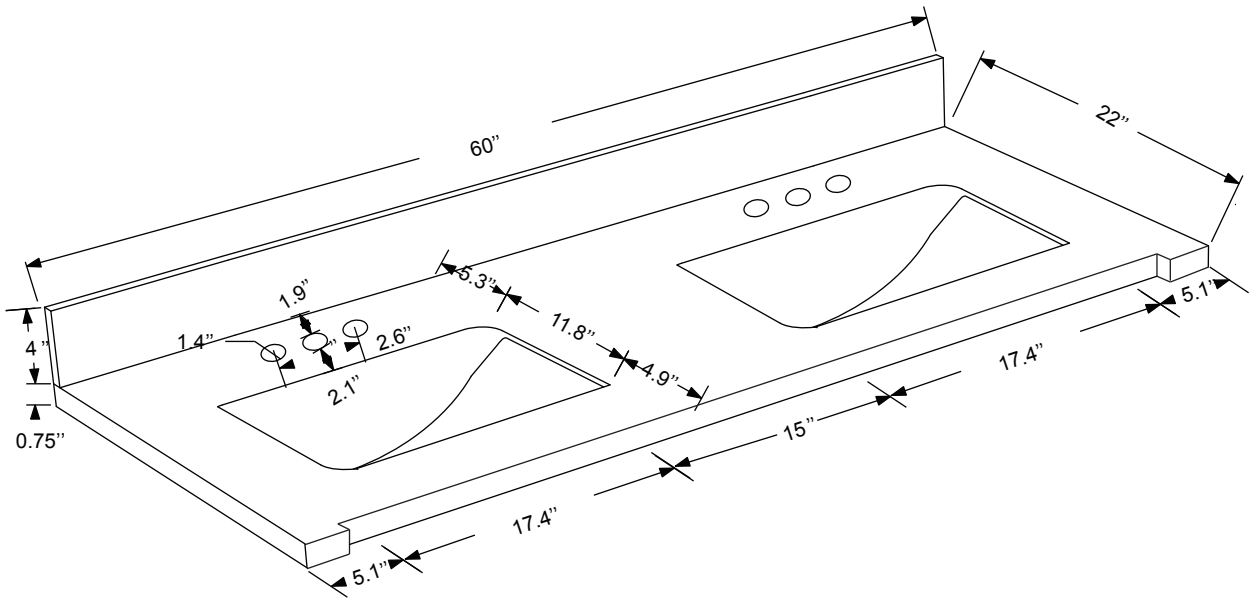

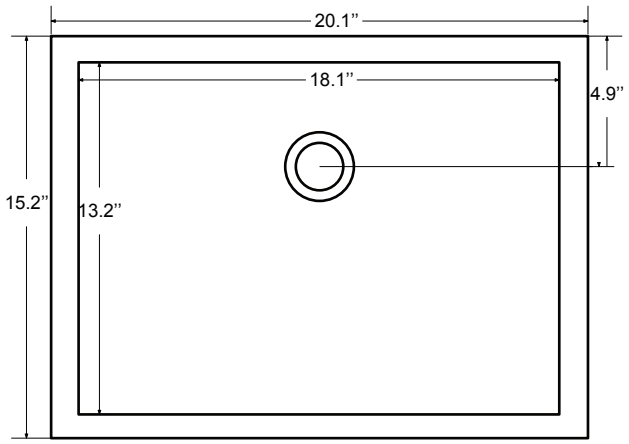

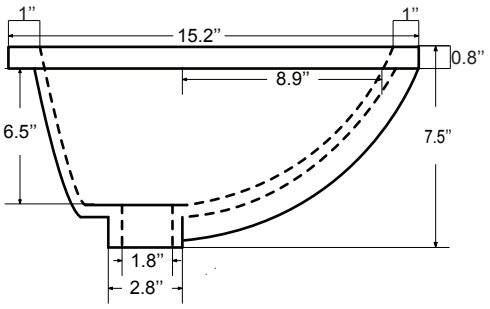

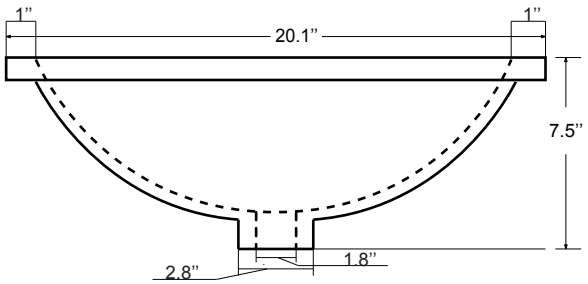

Dimensions:

Countertop: 60”×22”×0.75”
Rectangle undermount basin: 20.1”×15.2”×7.5”