UPD-BN-MR Umbrella Drain and Mounting Ring, Brushed Nickel

Requested By.: _____

Specific Features: _____

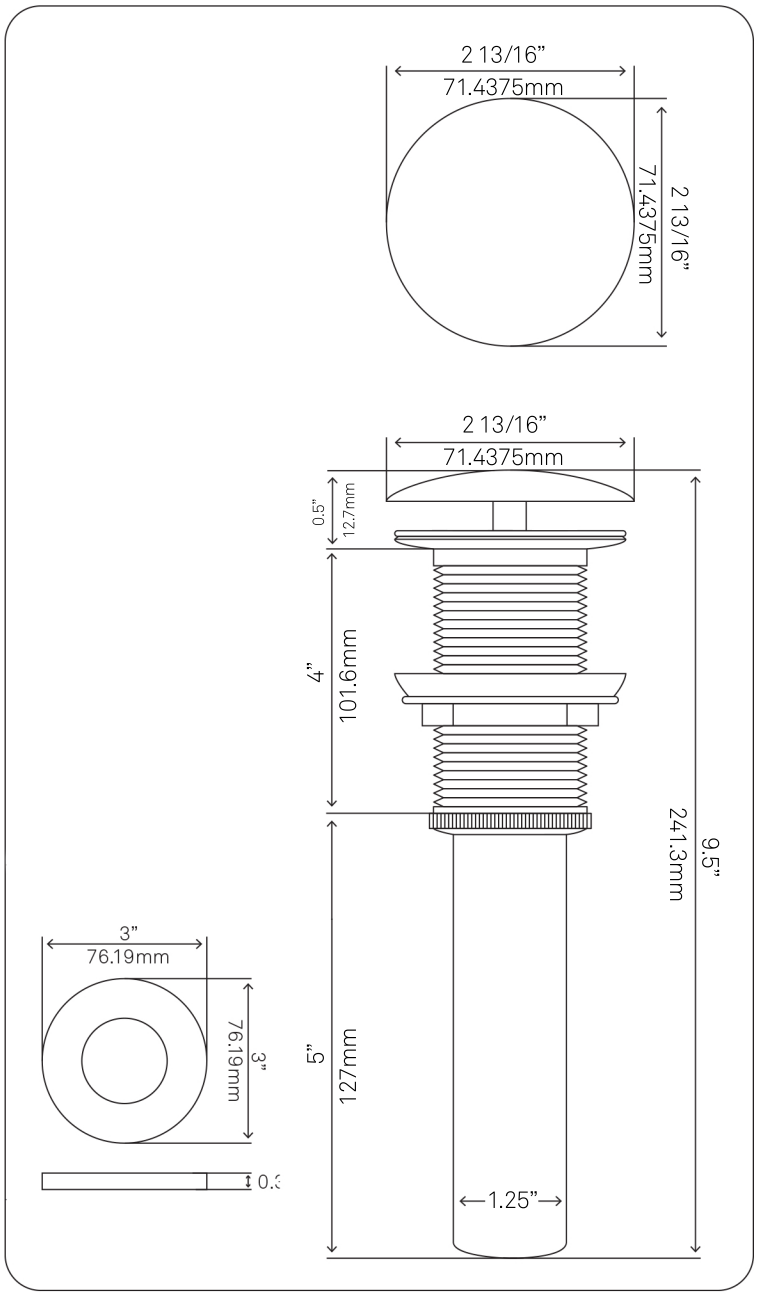

STANDARD SPECIFICATIONS:

- Umbrella vessel sink drain; drain STAYS open
- Mounting ring
- Brushed Nickel finish
- Solid brass construction
- Drain includes: rubber seals and fastener
- Drain: 9.5-inches total length
- Mounting ring includes: rubber seal to cushion sink
- Mounting ring: 3-inches wide x 3/8-inch high
- Fits any standard 1.75-inch drain opening
- cUPC

WARRANTY:

Limited lifetime warranty
- See www.Novatto.com for details

COORDINATING ACCESSORIES:

- Glacier Ice Restoration and Sealer kit

NOTES

Novatto reserves the right (1) to make changes in specifications and materials, and (2) to change or discontinue models, both without notice or obligation. Dimensions are for reference only, see www.Novatto.com for finish options and product availability.

Novatto Inc
TOLL FREE 844.404.4242
www.Novatto.com