KB2631,2,5,8NL
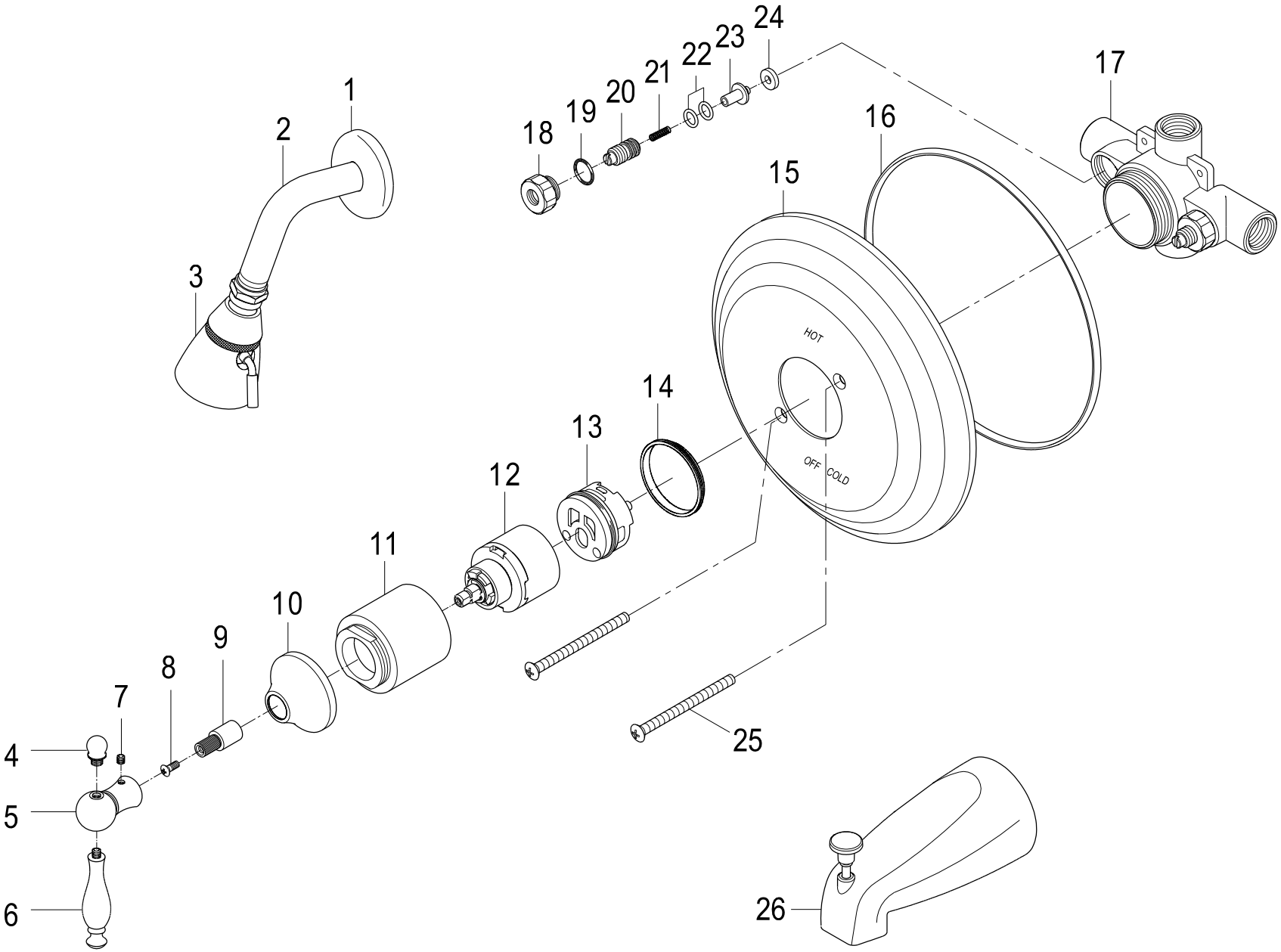
Single Handle Pressure Balanced Tub & Shower Faucet