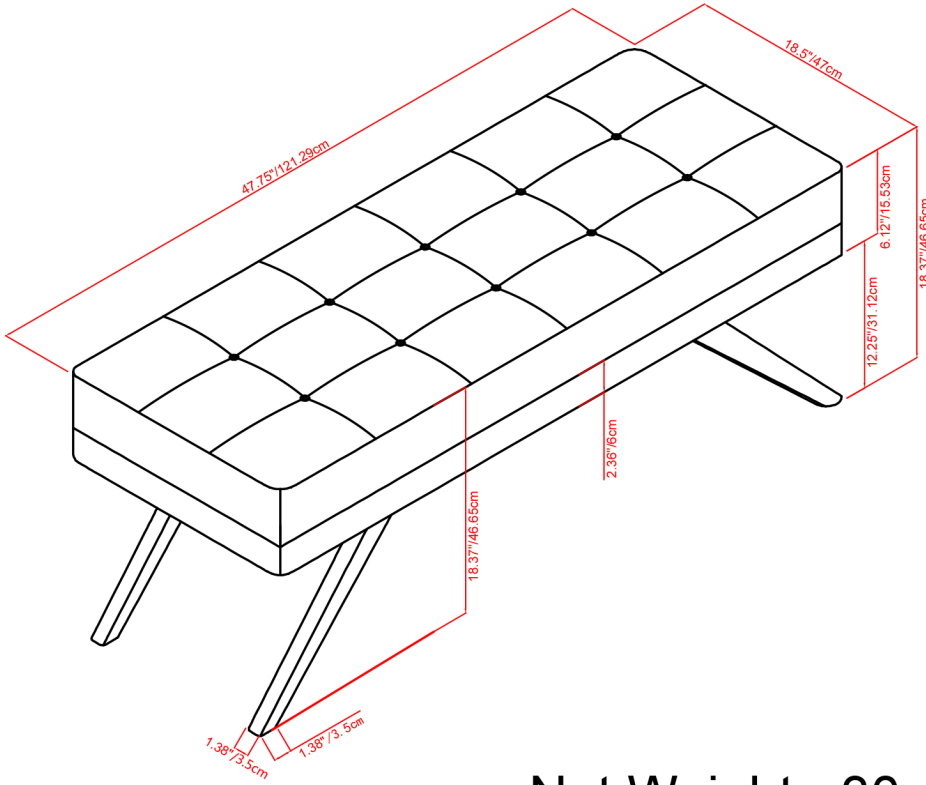

Net Weight - 30.4 lbs