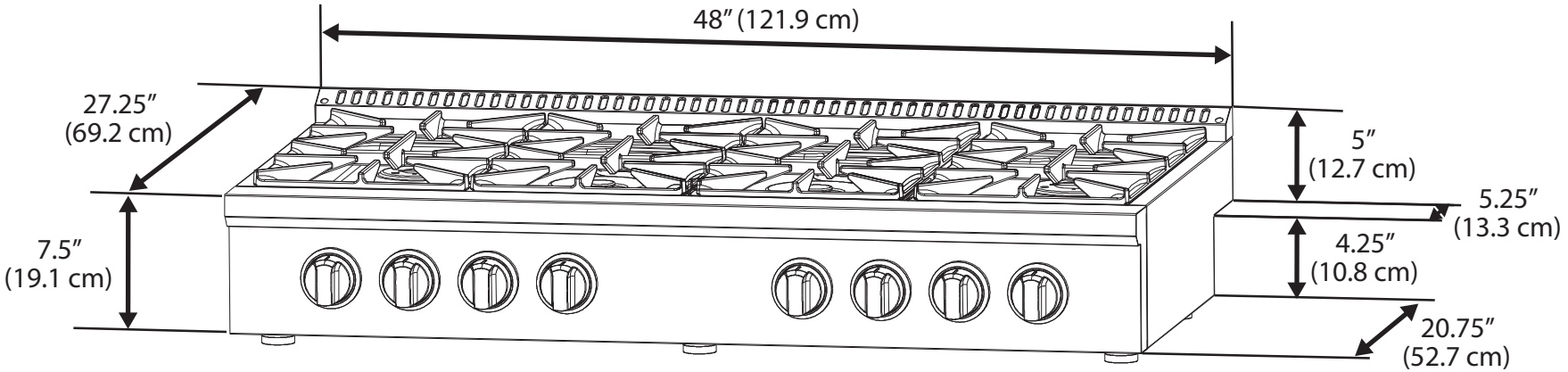
48″ (121.9 cm)
27.25″
(69.2 cm)
5″
(12.7 cm)
5.25″
(13.3 cm)
7.5″
(19.1 cm)
4.25″
(10.8 cm)
20.75″
(52.7 cm)

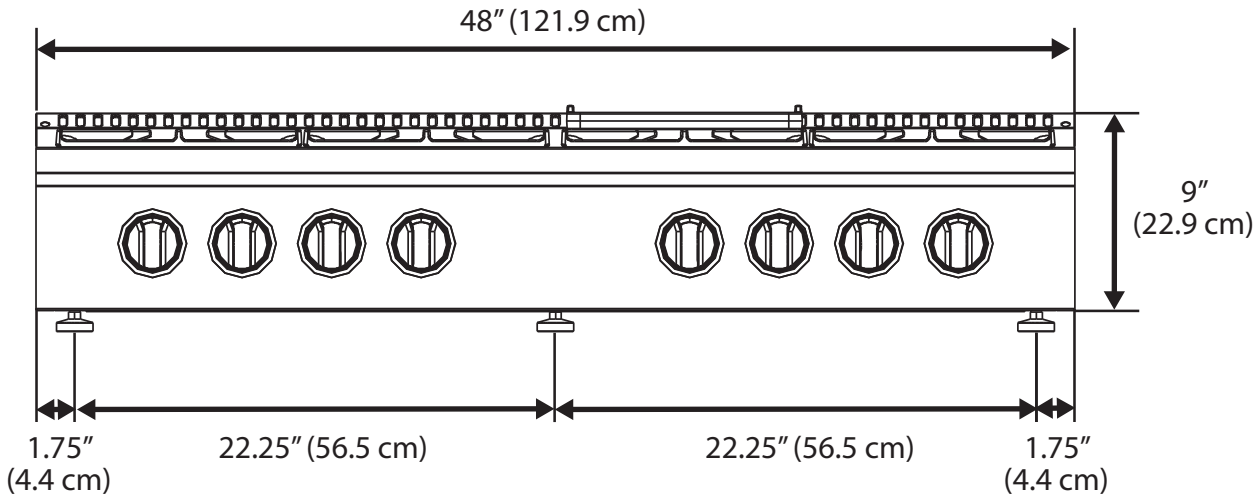
48″ (121.9 cm)
9″
(22.9 cm)
1.75″
(4.4 cm)
22.25″ (56.5 cm)
22.25″ (56.5 cm)
1.75″
(4.4 cm)