Vinnova Cádiz Vanity Collection 704184

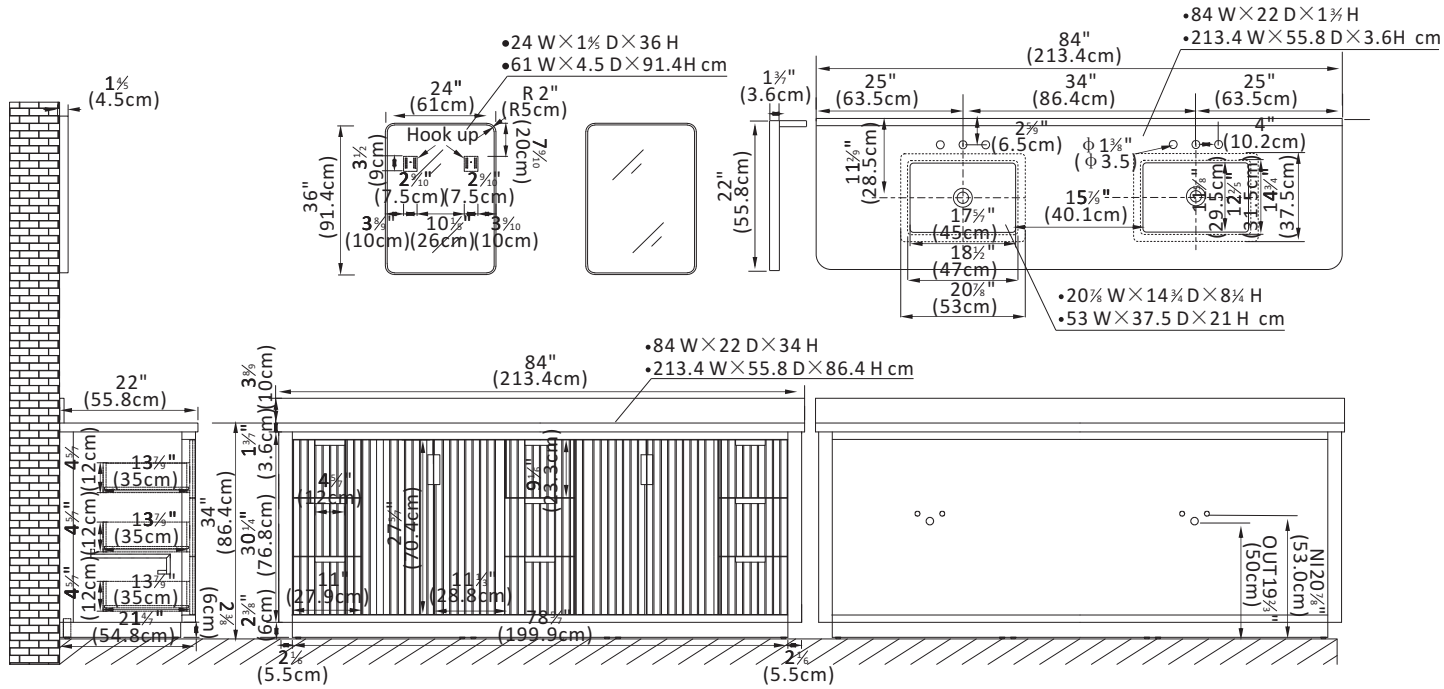

Features

●Durable Materials: Constructed of imported solid oak wood and plywood for superior durability and long-lasting beauty.
●Stunning Finish: Available in your choice of a beautiful Fir Wood Black or Washed Ash Grey finish to complement your décor.
●Ample Storage Space: Four soft-closing doors Includes interior shelf and nine sturdy, soft-closing dovetail drawers offer ample space for all your toiletries. Adjustable wooden drawer inserts allow you to keep toiletries and other items neatly organized.
●High-Quality Hardware: Brushed Gold hardware adds a warm touch of style and contrast against the textured wood.
●Modern Top: 1.4"-thick, composite stone top in Lightning White with backsplash provides a clean and elegant look. With a high-gloss, anti-fouling coating, the countertop is scratch-resistant, wear-resistant, and easy to clean.
●Nano-Coated Basin: Bright white ceramic undermount sink with overflow blends seamlessly with the stone vanity top.
●Practical Functionality: Built-in UL-listed power and USB outlets offer a practical way to power beauty and grooming appliances.Includes convenient hair dryer organizer that keeps your favorite tool within easy reach.
●Matching Mirrors: Double, rectangular, aluminum-framed mirrors complement the vanity and tie it all together. (Mirror Option)
●Faucet Type: Countertop has a pre-drilled, standard 8-inch widespread faucet holes.
●Accessories: Does not include faucet, drain assembly or P-trap,Storage Cabinet. Comes fully assembled and ready to install in your bathroom.
●No Installation Required: Freestanding bathroom vanity (without back panel) comes fully assembled for your convenience.
●Full Warranty: 1-Year Manufacturer Warranty—purchase with 100% peace of mind.
●Country of Origin: Vietnam

VINNOVA
FASHION BATHROOM LIFE