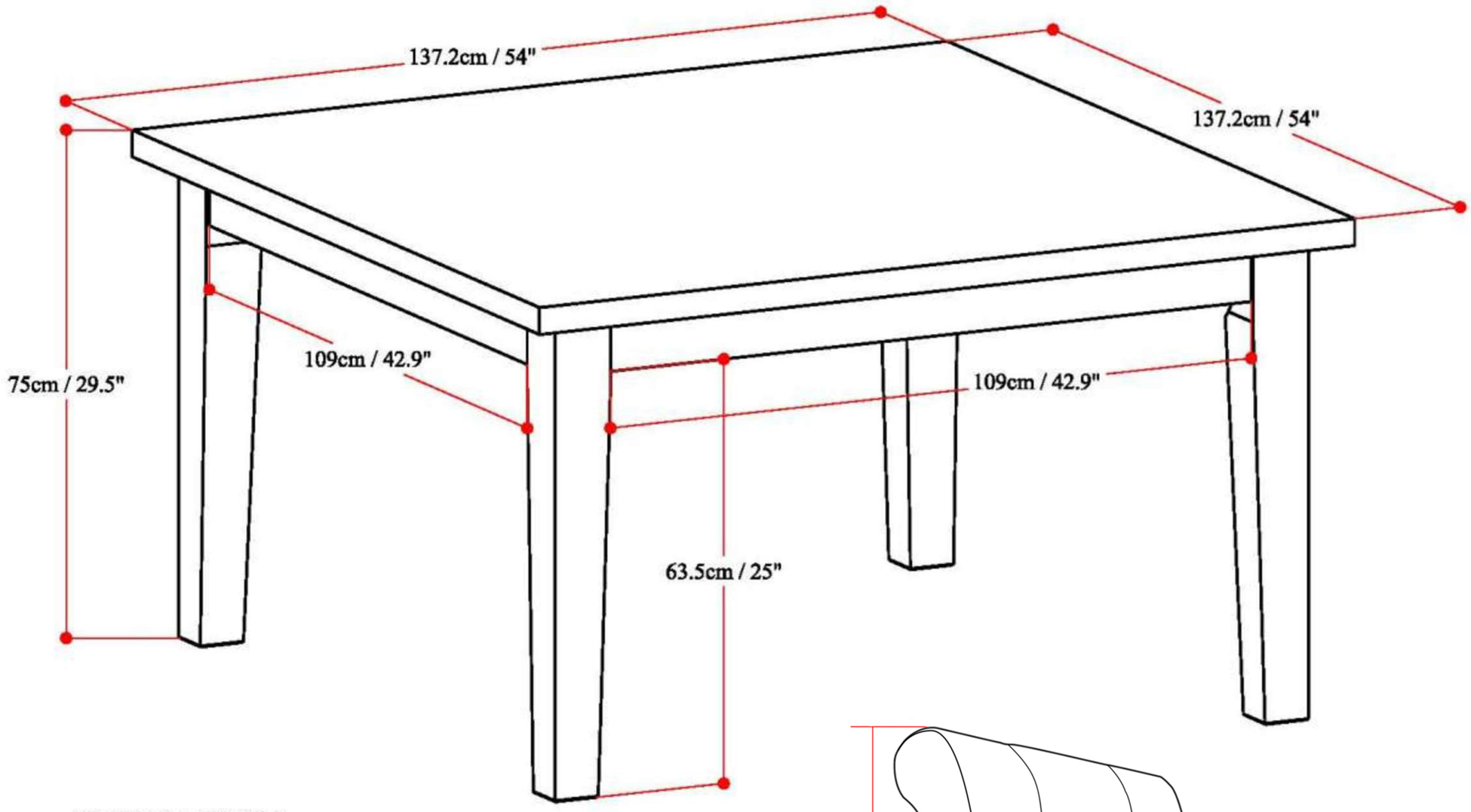

Net Weight : 120 (lb)

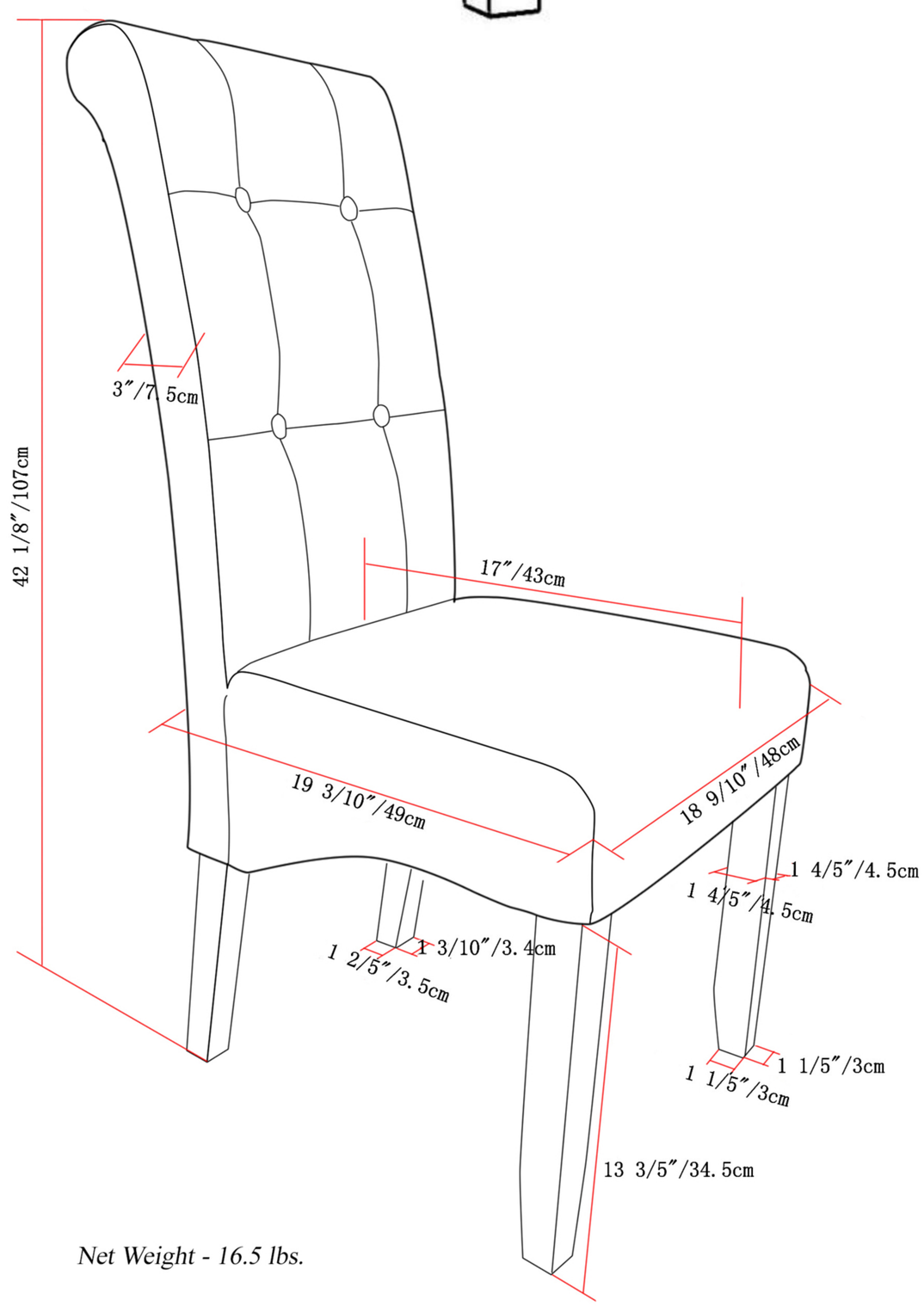

Net Weight - 16.5 lbs.