ASSEMBLY INSTRUCTIONS

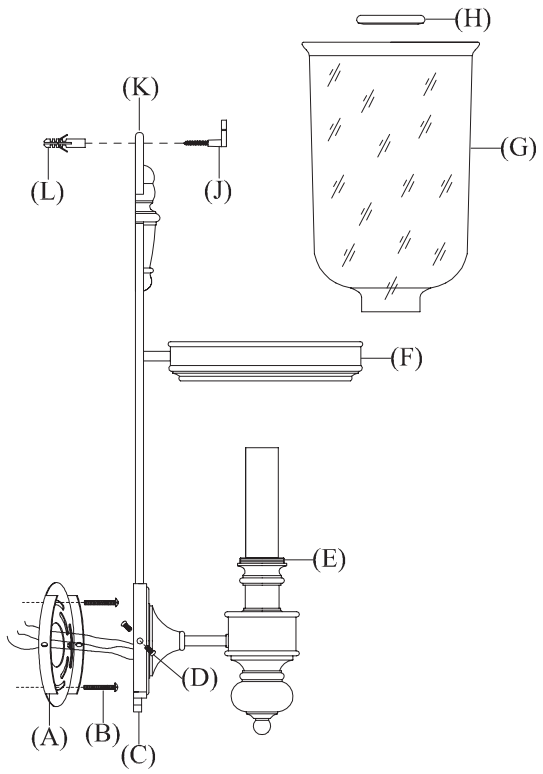

Georgian Small Hurricane Wall Sconce

Item # CHD2102

WE RECOMMEND INSTALLATION OF THIS LIGHTING FIXTURE BE DONE BY A LICENSED ELECTRICIAN.

WARNING * SWITCH OFF THE MAIN ELECTRICAL SUPPLY FROM THE MAIN FUSE BOX/CIRCUIT BREAKER BEFORE INSTALLATION.**

INSPECT ITEM CAREFULLY BEFORE ATTEMPTING TO INSTALL. IF THERE IS ANY DAMAGE OR OBVIOUS DEFECT, DO NOT INSTALL.

ITEM MAY NOT BE RETURNED ONCE IT HAS BEEN INSTALLED.

---

1. Remove mounting plate (A) from fixture base (C) by removing base screws (D).
2. Affix mounting plate (A) to wall outlet box with mounting screws (B) provided.
3. Place fixture base (C) on the mounting plate (A), use the fixture base as the template, mark top point of the inner hole of hanging ring (K), on the wall using pencil. Remove the fixture base (C).
4. Drill 118" hole into your pencil marks on the wall. For the hole: If you encounter a wall stud, then drive a locking screw (J) into the hole.
5. If you don't encounter a wall stud, drive a plastic anchor (L) into the hole. Once the plastic anchor (L) is flush with the wall surface, drive a locking screw (J) into the plastic anchor (L). In both case, make sure the handle of the locking screw (J) is facing upwards, so it holds the hanging ring (K).
6. Attach ground (green) wire to ground wire from wall outlet box (usually green or copper in color), fasten together with a plastic wire connector. Tightly wrap the wire connector with electrical tape so the end of the connector is sealed.
   IT IS IMPERATIVE THAT THE OUTLET BOX IN YOUR HOME BE PROPERLY GROUNDED.
7. Connect neutral (white) fixture wire coming from fixture base to neutral (usually white) outlet wire. Fasten both wires together with a plastic wire connector and tightly wrap the wire connector with electrical tape.
8. Repeat the procedure with the hot (black) wires. Always make sure that no wire strands are left outside the connectors.
   DO NOT REVERSE THE HOT AND NEUTRAL CONNECTIONS OTHERWISE SAFETY WILL BE COMPROMISED.

ASSEMBLY INSTRUCTIONS

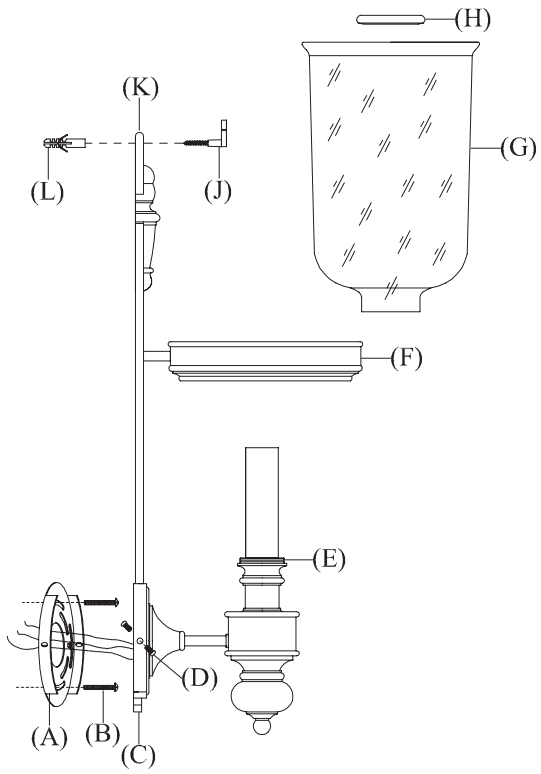

Georgian Small Hurricane Wall Sconce

Item # CHD2102

WE RECOMMEND INSTALLATION OF THIS LIGHTING FIXTURE BE DONE BY A LICENSED ELECTRICIAN.

WARNING * SWITCH OFF THE MAIN ELECTRICAL SUPPLY FROM THE MAIN FUSE BOX/CIRCUIT BREAKER BEFORE INSTALLATION.**

INSPECT ITEM CAREFULLY BEFORE ATTEMPTING TO INSTALL. IF THERE IS ANY DAMAGE OR OBVIOUS DEFECT, DO NOT INSTALL.

ITEM MAY NOT BE RETURNED ONCE IT HAS BEEN INSTALLED.

---

9. Hook fixture base (C) onto head of on screw (J) and attach fixture base (C) to mounting plate (A) and tighten with base screws (D).
10. Install bulb of correct type and wattage. See label on lamp.
11. Attach lamp shade (G) through the shade holder (F) onto the socket, and screw with socket ring (H).10.
12. INSTRUCTIONS FOR MOUNTING FIXTURE OUTDOORS AND/OR IN WET LOCATION:
    a. Mounting surface should be clean, dry, flat and 114” larger than canopy/fixture base on all sides. Any gaps between the mounting surface and canopy/fixture exceeding 3/16” should be corrected as required.
    b. With silicone (ex. GE-108) caulking compound, caulk completely around where back of canopy/fixture base meets the wall surface to prevent water from seeping into outlet box.