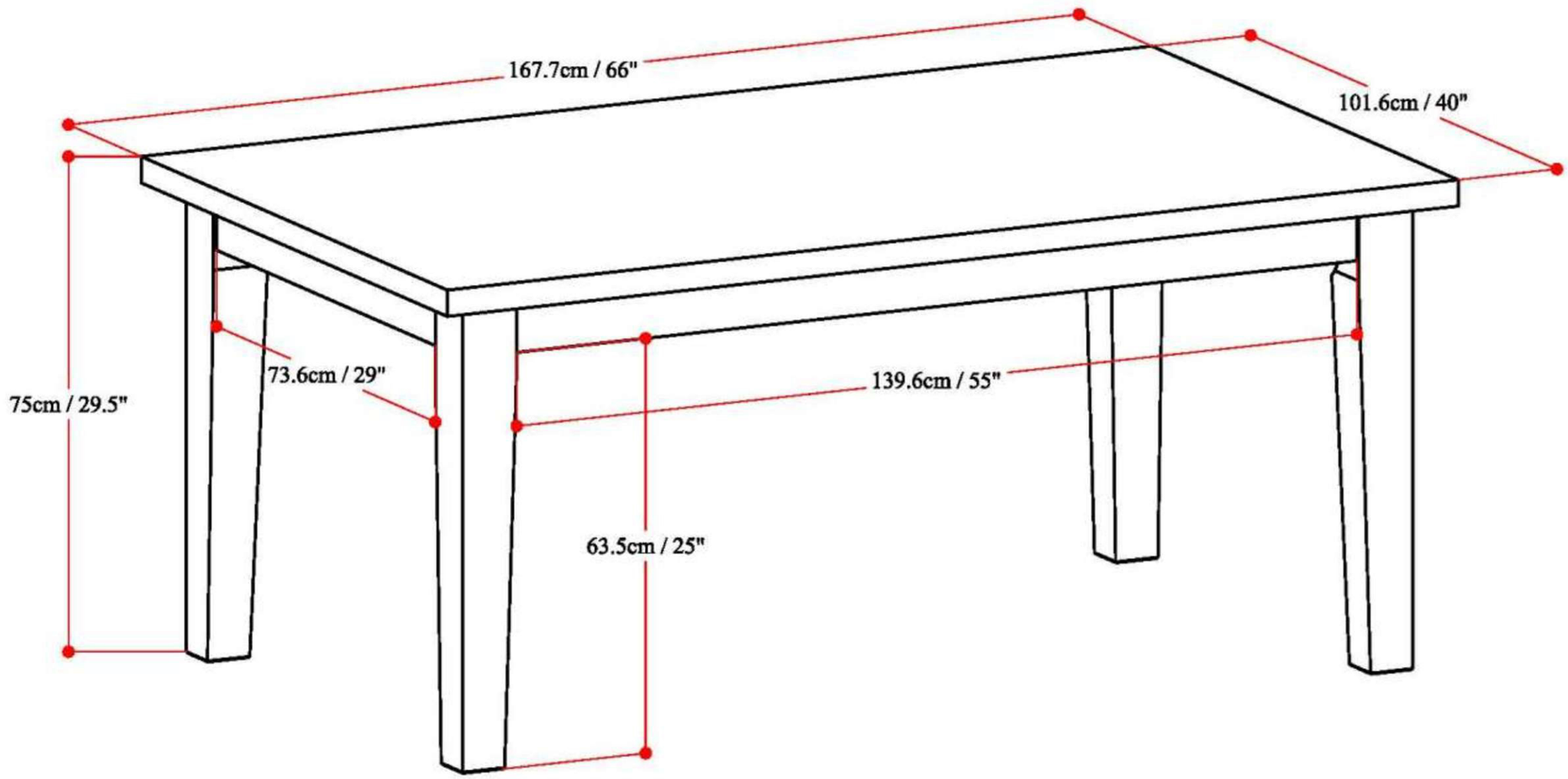

Net Weight : 115 (lb)