Reliance® Shower Bases

R4832CD

48" x 32" x 5"

Material - Acrylic
Shipping Weight - 45 lbs / 20 kg
Threshold - Multi Threshold
Drain Location - Center

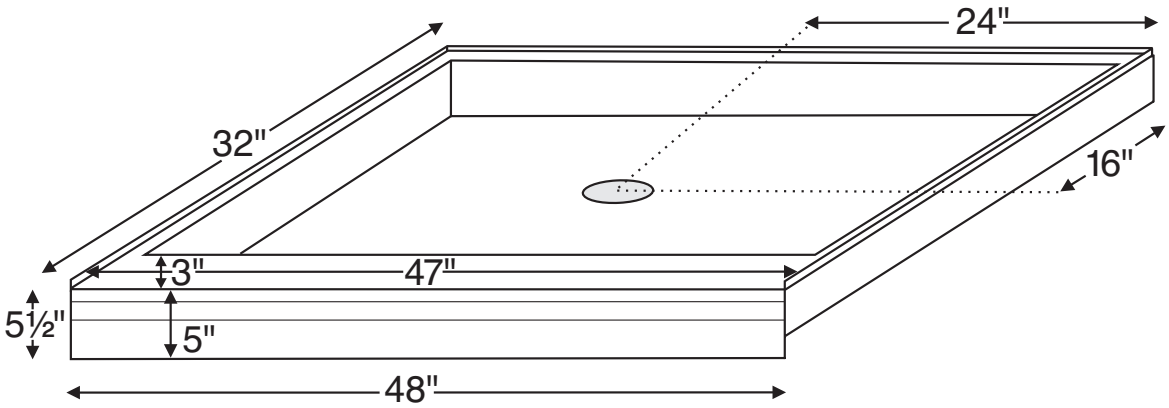

COLOR AND FINISH OPTIONS **NOTE:** Part codes for all options listed in parenthesis.
Color Upgrade: Biscuit (RCOLOR)
STANDARD OPTIONS **NOTE:** Part codes for all options listed in parenthesis.
PVC Drain Kit Brushed Nickel (RDKBN)

IMPORTANT ORDERING & INSTALLATION INFORMATION:

- Single, front threshold; 3.5” drain opening pre-drilled.
- Integral tile flange on 3 sides to facilitate installation.
- Textured bottom meets certification requirements for safer showering.
- Includes a PVC drain kit in chrome finish.
- 1-year Limited Residential and Commercial Warranty.

- Before discarding tub crate, check for accessories that may be packaged inside.
- All product measurements are ±1/2”.
- Specifications and configurations are subject to change without notice.
- Measurements herein supersede all others published prior to publication date below.

ASTM F-462-1994 Certified

CSA # MTSB-4832

©2021 by MTI Baths, Inc. Modification Rights Reserved

Reliance®

Rev. 06 17 2021