Vinnova Caparroso Vanity Collection 705360

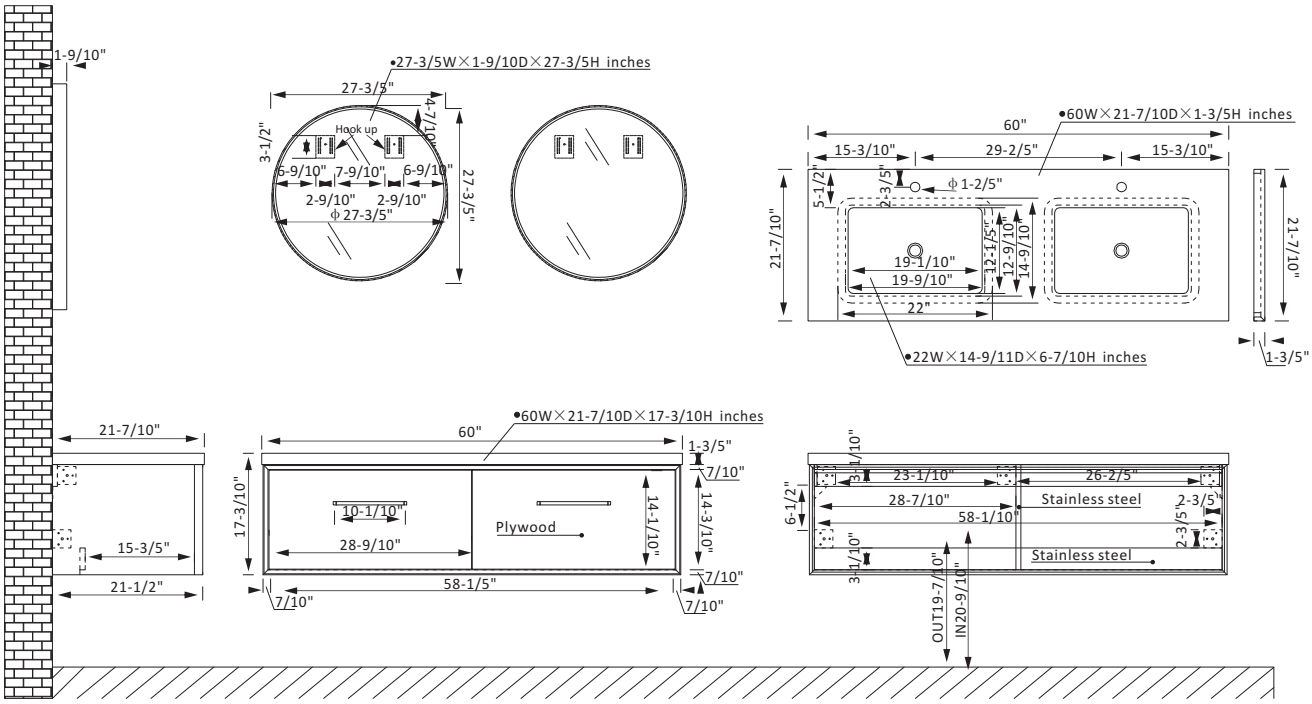

Features

Cabinet is constructed of stainless steel with a solid wood surface to deliver long-lasting beauty and durability.
Available in stunning Light Walnut or Dark Walnut finish to complement any décor.
2 soft-closing drawers feature a full-extension glide to maximize your storage space.
1.6"-thick, integrated sintered stone top in Grey offers a clean, elegant look and resists scratches, stains, and cracks.
45-degree chamfered water retaining edges lend a unique aesthetic while helping to prevent drips.
Rectangular, White ceramic undermount sink coordinates beautiful with vanity top and includes overflow to prevent overfilling of basin.
Matte Black- or Brushed Gold-finish hardware lends a touch of modern style and striking contrast.
Double, circular aluminum-frame mirror complements the vanity and ties it all together. (Mirror Option)
Countertop has a pre-drilled, standard 1-3/8" faucet hole for easy plumbing and faucet installation.
Floating bathroom vanity (without back panel) comes partially assembled for your convenience.
1-Year Manufacturer Warranty—purchase with 100% peace of mind.
Vanity Dimensions:
705360-PL-NS/705360-PR-NS (Double sink)
Cabinet: 59.6"W x 21.5"D x 15.7"H
Top: 60"W x 21.7"D x 1.6"H
Overall Dimensions: 60"W x 21.7"D x 17.3H
Basin Depth: 6.7"
All specifications are subject to change without prior notice.

** Does not include faucet, drain assembly, P-trap or backsplash.*

VINNOVA
FASHION BATHROOM LIFE