PARTS LIST / LISTE DES PIÈCES / LISTA DE PIEZAS
ITEM NO. / ARTICLE NO. / ARTICULO NO : DS-2281-683
DESCRIPTION / DESRIPCION :STORAGE UPH BED BENCH - TRESPASS MARMOR/BANC RECOUVERT/BANCO TAPIZADO

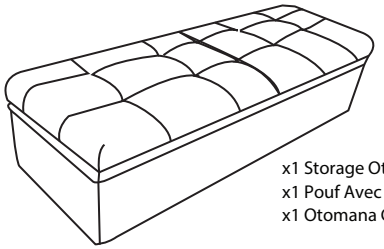

Ⓐ
x1 Storage Ottoman
x1 Pouf Avec Rangement
x1 Otomana Con Almacenamiento

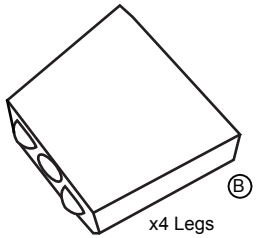

Ⓑ
x4 Legs
x4 Jambes
x4 Piernas

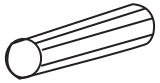

Ⓒ
x4 Wood dowel
x4 Goujon en bois
x4 Tarugo de madera

Ⓓ
x 4 Bolt M8 x 60mm
x 4 Boulon M8 x 60mm
x 4 Perno M8 x 60mm

Ⓔ
x4 Spring Washer
x4 Rondelle à ressort
x4 Arandela auto-bloqueante

Ⓕ
x 1 Allen Wrench M5x120mm
x 1 Clé hexagonale M5x120mm
x 1 Llava Allen M5x120mm

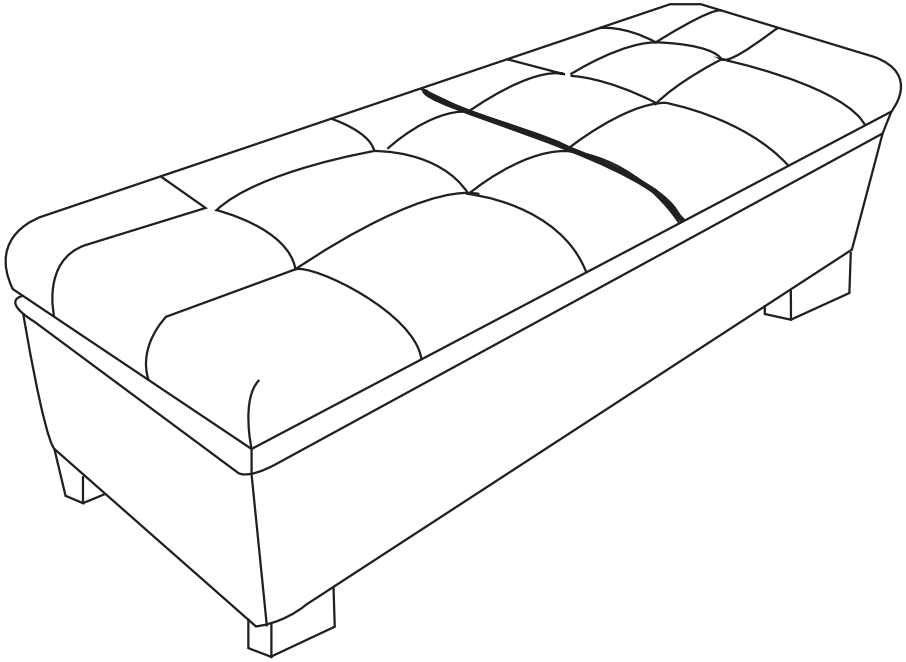

Residential Use Only

Made in Malaysia /Fabriqué au Malaisie /Hecho en Malasia
For assembly instruction video, please go to : www.myfurnitureinstruction.com

Step 1 /Étape 1/Paso 1

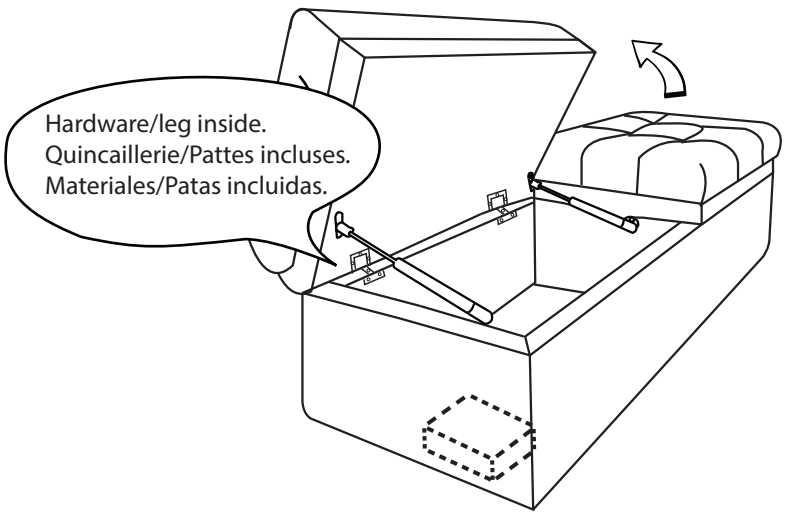

Step 2 /Étape 2 /Paso 2

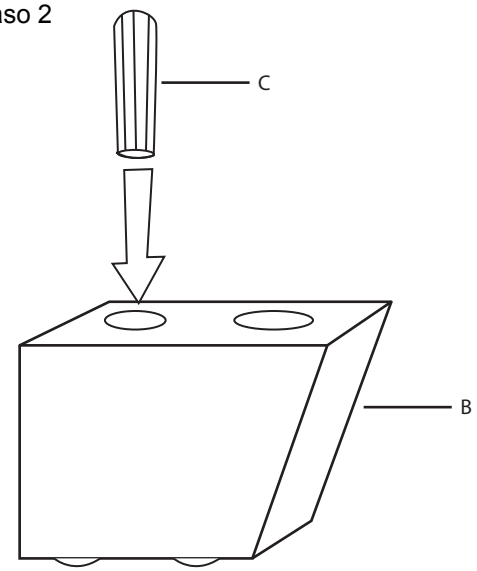

Step 3 /Étape 3/Paso 3

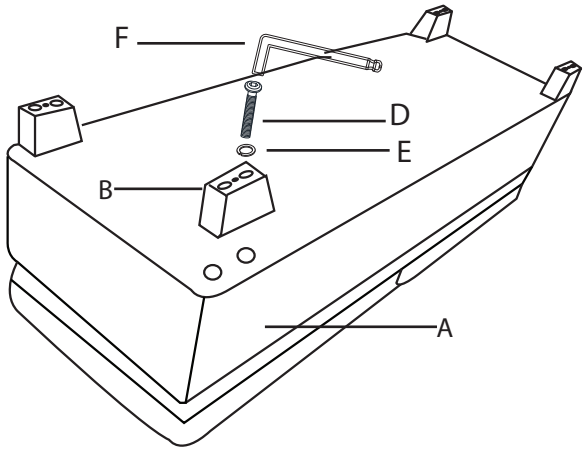

Step 4 /Étape 4/Paso 4

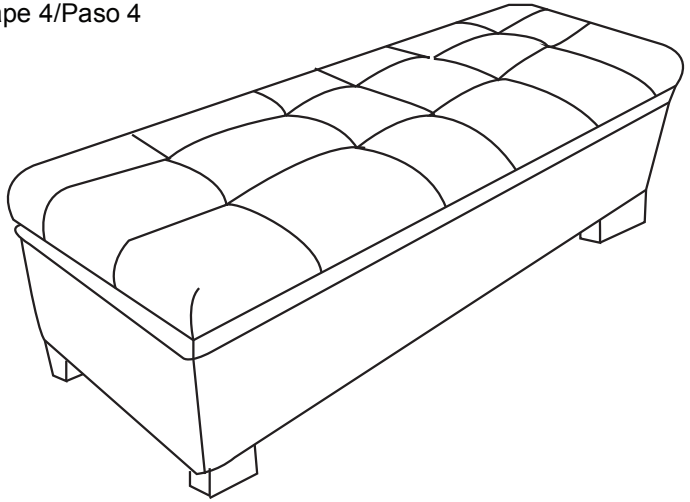

Residential Use Only

Made in Malaysia /Fabriqué au Malaisie /Hecho en Malasia
For assembly instruction video, please go to : www.myfurnitureinstruction.com

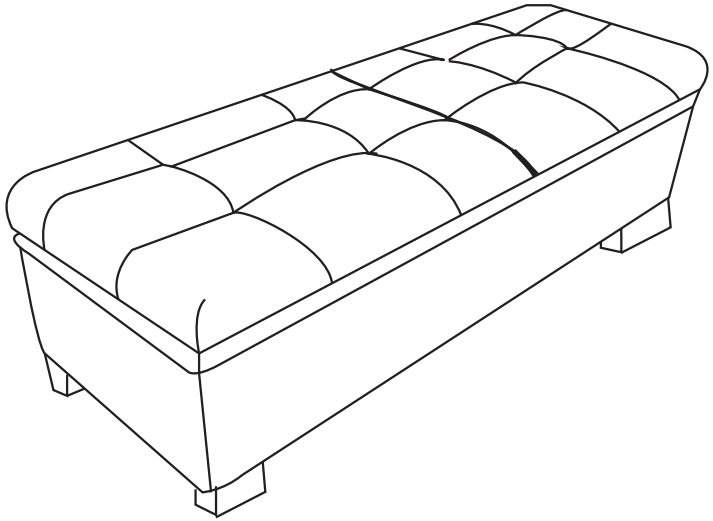

#	PART NUMBER	DESCRIPTION	PARTS	QUANTITY
1	RDS2281-LEG	Leg Jambes Piernas	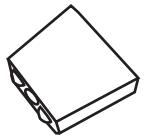	4
2	RDS2281-HRDWRKIT	Hardware kit list Liste des pièces de quincaillerie Lista del kit de materiales	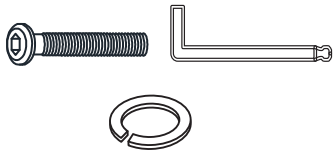	1
3	RDS2281-683-HINGE	Gas Hinge Charnière Bisagra	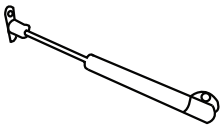	4

Residential Use Only

Made in Malaysia /Fabriqué au Malaisie /Hecho en Malasia
For assembly instruction video, please go to : www.myfurnitureinstruction.com