Installation Guide

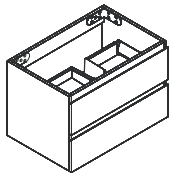

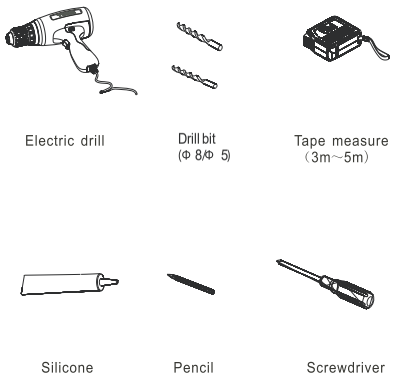

Tools required for installation

CABINET

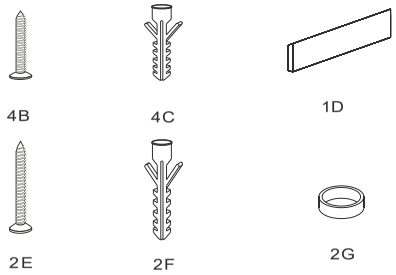

1

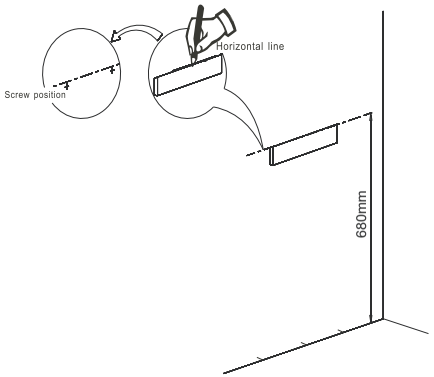

2

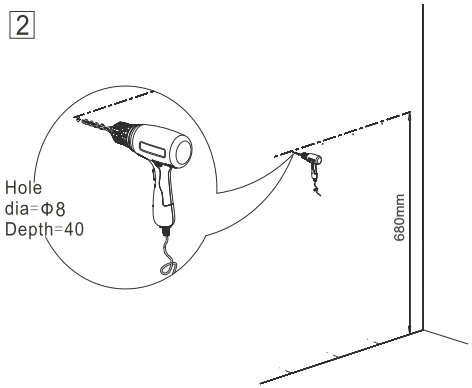

3

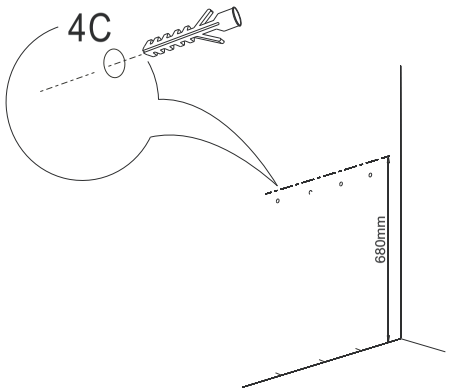

4

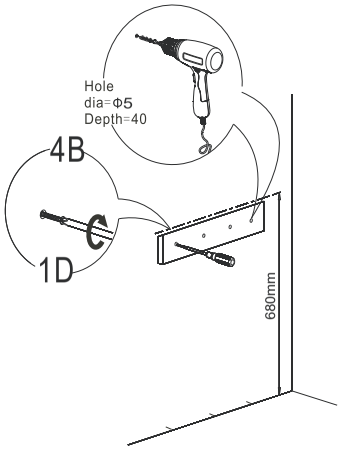

5

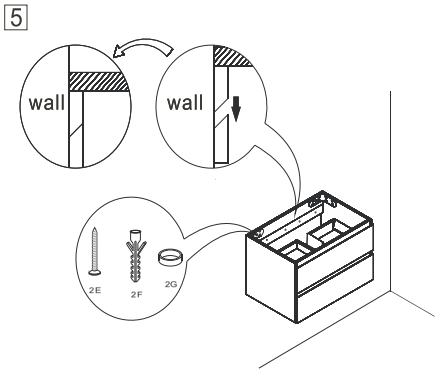

6

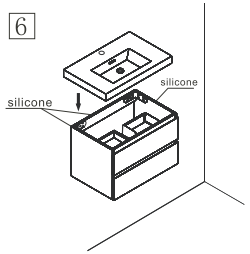

7

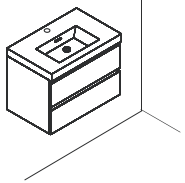

DRAWER REMOVAL

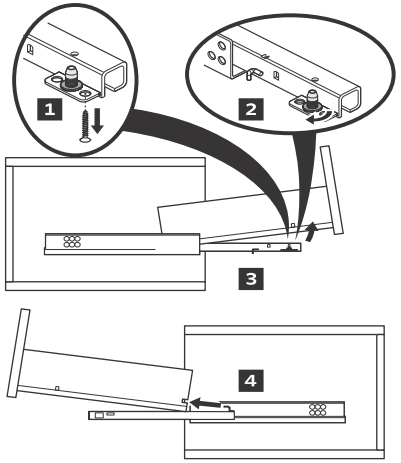
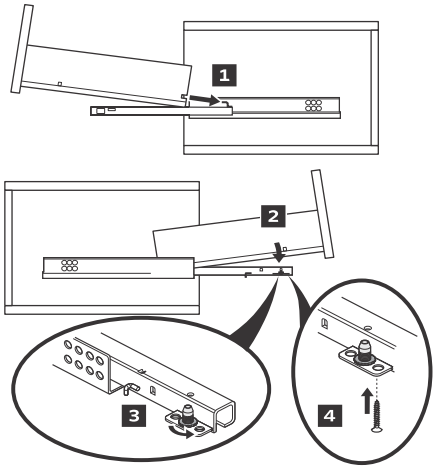
DRAWER INSTALLATION