KB1401,2,3,5,8BL
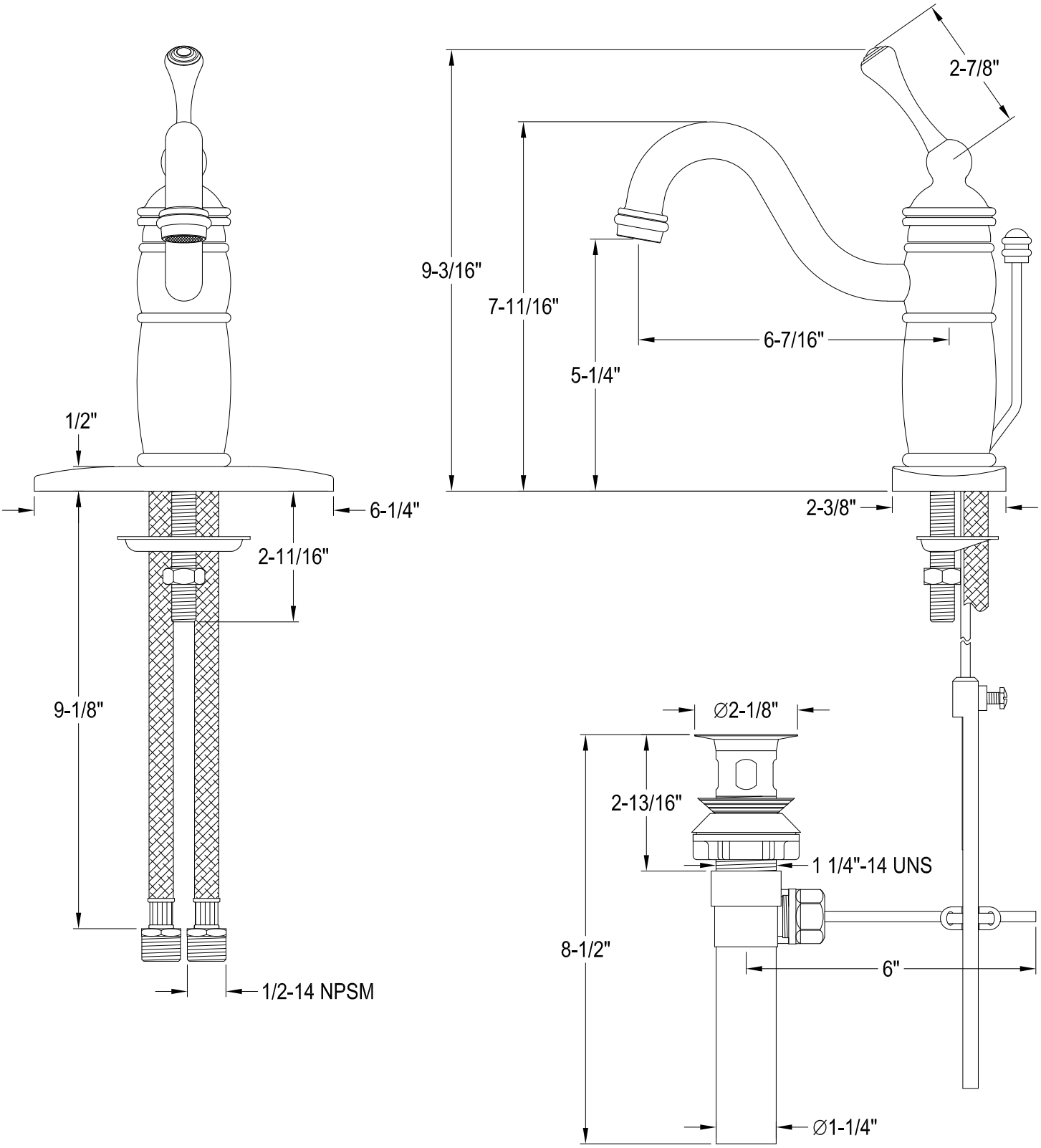
Single Handle 4" Centerset Lavatory Faucet With Retail Pop-Up