AQLIGHTING

Italian Designed Industrial Warehouse Pendant

DESCRIPTION

Material: Die Cast Aluminum
Voltage: 120V AC
Socket Type: GU24
Bulb Type: LED Module
Power Rating: 20w Max
Mounting: Ceiling - Adjustable Height
Fixture Weight: 13.2 lbs

DIMENSIONS

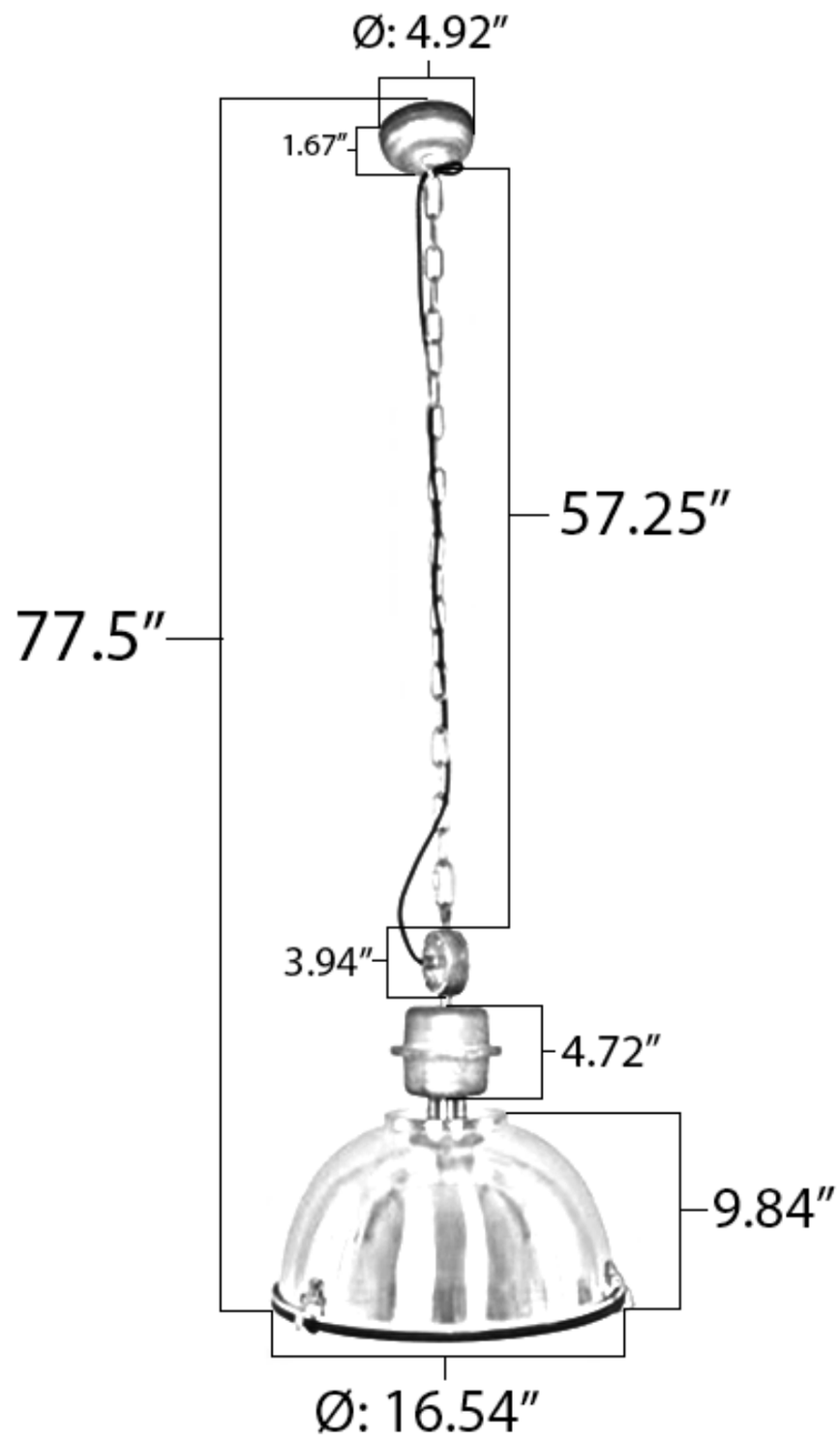

FINISHES

ORDERING INFORMATION

AQ-PS7586	VOLTAGE	FINISH		LED BULB	
	120V	BLK	Black	WWPU60	11W Dimmable 800 Lumens Warm White 3000K LED Squat Light
		WHT	White	WWA21	22W Dimmable 2200 Lumens Warm White 3000K LED Bulb
		BLU	Blue	CWA21	22W Dimmable 2200 Lumens Cool White 5000K LED Bulb
		ALUM	Brushed Aluminum		
		COP	Copper		
		RED	Red		
		BRD	Faux Brown		
		RBRZ	Retro Bronze		
		BRONZE	Bronze		

AQ-PS7586- 120V - ____ - _____

Fixture Type:_____
Job Name:_____
Notes:_____