Streamline

INSTALLATION MANUAL

ACRYLIC SHOWER BASE

OWNER'S MANUAL & INSTALLATION GUIDE

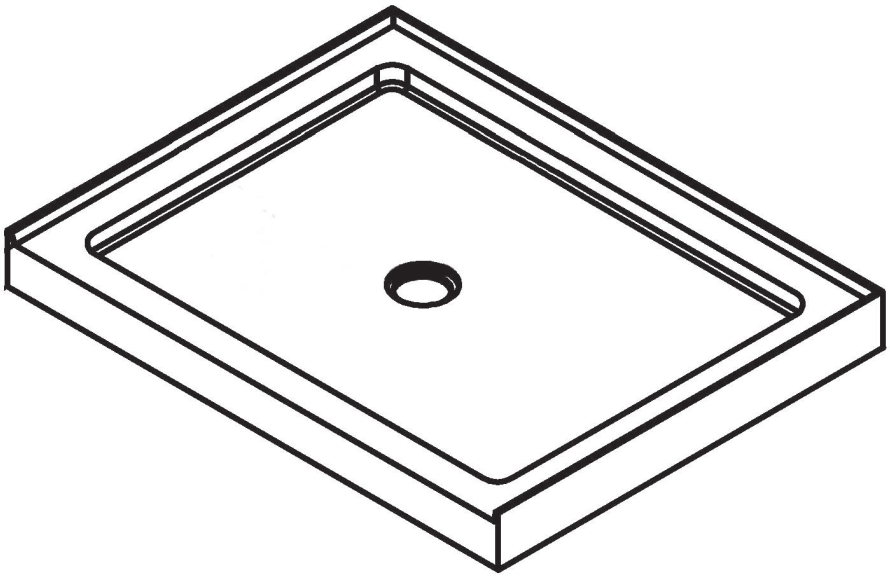

READ ENTIRE INSTALLATION GUIDE PRIOR TO INSTALLING THE SHOWER BASE

SCAN FOR

YouTube Channel

streamlinebath.com support@streamlinebath.com (310) 935-0028

TABLE OF CONTENTS

1. Prior To Installation 3
2. Tools Required 6
3. Installation Instructions 7
4. Product Care 29
5. Warranty 32

1. Prior To Installation

To Our Valued Customers,

We wanted to take a moment to express our sincere gratitude for choosing our shower base for your bathroom. Your recent purchase is greatly appreciated, and we are delighted to have you as our valued customer.

At Streamline, we strive to provide the highest quality products, and we are confident that our shower base will exceed your expectations in terms of both functionality and style. We have put in great effort to ensure that our shower base enhances your bathing experience while adding an elegant touch to your bathroom.

We would like to assure you that our dedicated team is always here to assist you with any questions or concerns you may have regarding the installation or maintenance of your new shower base. Your satisfaction is our top priority, and we are committed to delivering excellent customer service throughout your journey with us.

Once again, we genuinely appreciate your trust in our brand and your decision to choose our shower base. We hope it brings you years of enjoyment and satisfaction. If there is anything we can do to further assist you, please do not hesitate to reach out to us.

Thank you for being a valued customer.

Warm regards,

The Streamline Team

- Two people are recommended to install the shower base.
- Read all installation instructions prior to starting the installation.
- We recommend allowing the shower base to reach room temperature before starting the installation process.
- Prevent exposure to moisture during the installation process.
- Please avoid installing the shower base on open floor joists.
- Before installation, carefully examine the shower base to ensure it has not sustained any damage during shipping.
- The framing studs need to be vertically straight and at right angles to the subfloor, which will serve as the foundation for the base.
- Make sure all wood studs and supports are properly installed.
- The dimensions of the opening should be at least 1/8 inch (3mm) larger than the dimensions indicated on the specification sheet.
- Please note that the dimensions provided are for reference only. It is crucial to accurately measure the shower tray dimensions, including the overall size, base thickness, and location of the drain, before beginning the installation process.
- We recommend only cutting a hole in the subfloor once you have received the shower base.
- It is advised to avoid stepping on the shower base until the installation process is complete.
- The floor system should possess adequate reinforcement and support to sustain a load of 50 pounds per square foot.
- The shower base needs to be supported solely by the floor, carrying its weight without relying on any other elements. **DO NOT** let the skirt or the flange support the weight of the shower base.
- These products must be installed by a fully insured and licensed plumber only. Before commencing the installation process, carefully inspect all boxes and packages for any shipping damages.
- Once you've opened all the boxes, read the instructions thoroughly, and ensure all the necessary components are included in the package. If there is damage, **DO NOT INSTALL THE PRODUCT!**

- Installation of any product by anyone other than a fully insured and licensed plumber shall void the limited warranty.
- Building and plumbing codes may vary state-to-state. We are not responsible for any local code compliance for this product.
- Streamline shall not be held liable for any and all incidental damage or flood caused due to the use of this product.
- Streamline shall not be held liable for any and all fees stemming from the cost of installation, re-installation, removal, subsequent damage, or transportation in the case of a product defect.
- Streamline shall not be held responsible for defects or damage that could have been discovered, repaired, or avoided by inspection and testing prior to installation. The shower base must be checked upon delivery.
- Make sure to test all plumbing connections as well as check for leaks prior to finalizing installation. Streamline is not responsible for defects and problems discovered or that could have been repaired or avoided by following this step.
- It is essential to use this product with a shower door. Failure to do so could lead to harm to both property and individuals. Ensure compliance with all relevant plumbing codes during installation.

IT IS CRUCIAL TO REVIEW ALL PROVIDED INSTRUCTIONS AND WARNINGS THOROUGHLY. FAILURE TO COMPLY WITH THESE INSTRUCTIONS AND WARNINGS MAY LEAD TO SEVERE INJURY OR EVEN LOSS OF LIFE DUE TO MISHANDLING OR IMPROPER INSTALLATION OF THE PRODUCT.

TO ENSURE A SAFE INSTALLATION, IT IS IMPERATIVE TO ADHERE TO THESE INSTRUCTIONS. FOR THE INSTALLATION PROCESS, IT IS MANDATORY TO ENGAGE A PROFESSIONAL INSTALLER WHO IS LICENSED AND INSURED. THE INSTALLATION REQUIRES THE PRESENCE OF TWO INDIVIDUALS.

UNDER NO CIRCUMSTANCES SHOULD ANY ALTERATIONS OR MODIFICATIONS BE MADE TO THE PRODUCT. ANY MODIFICATION TO THE PRODUCT WILL LEAD TO SEVERE INJURIES OR, IN SOME CASES, EVEN FATAL CONSEQUENCES.

2. Tools Required

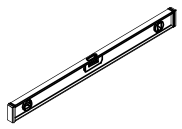

Level

Jigsaw

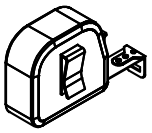

Tape Measure

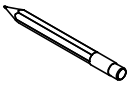

Pencil

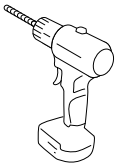

Power Drill

Safety Glasses

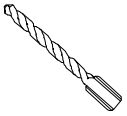

3/16" (5mm) Drill Bit

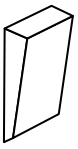

Wood Shims

Construction Adhesive

Mortar Compound

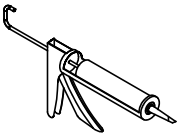

Silicone Caulk

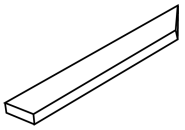

Furring Strips

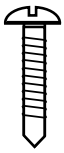

Screws #8 x 32 mm (1 ¼" Stainless Steel)

3. Installation Instructions

1. Ensure the framing studs are vertically straight, right-angled to the floor, and level.

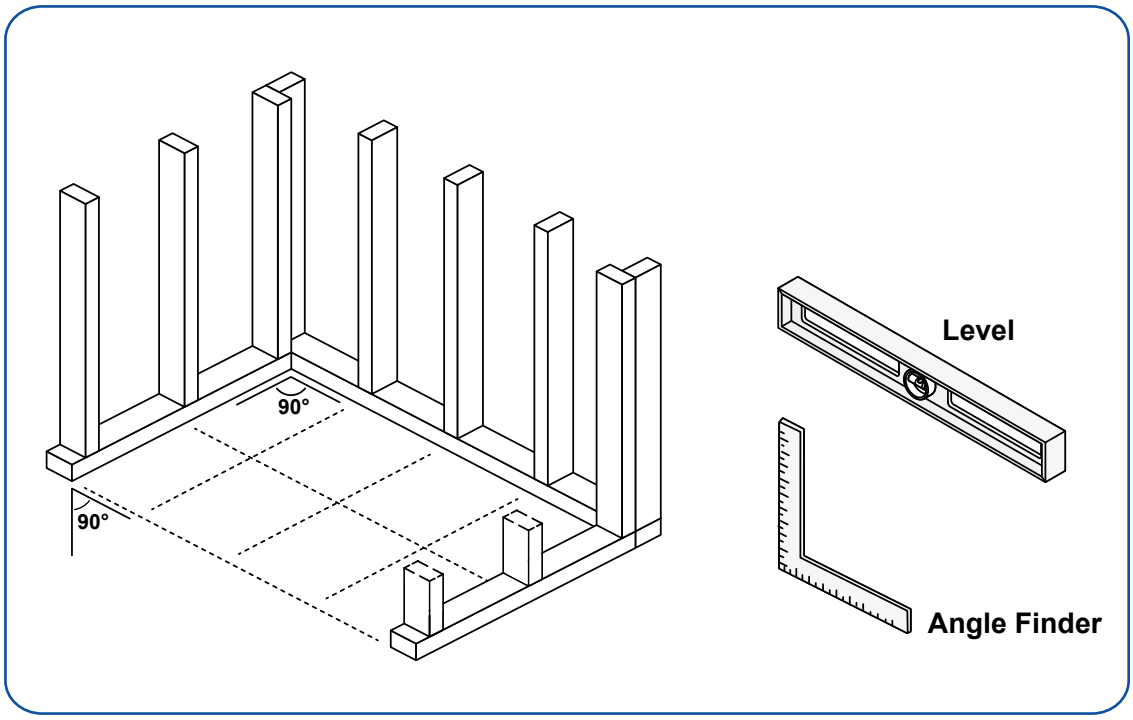

2. To ensure proper installation and stability, the shower base should be installed directly against the studs and not against the wall. This will provide a secure and sturdy base for the shower and prevent any shifting or movement over time.

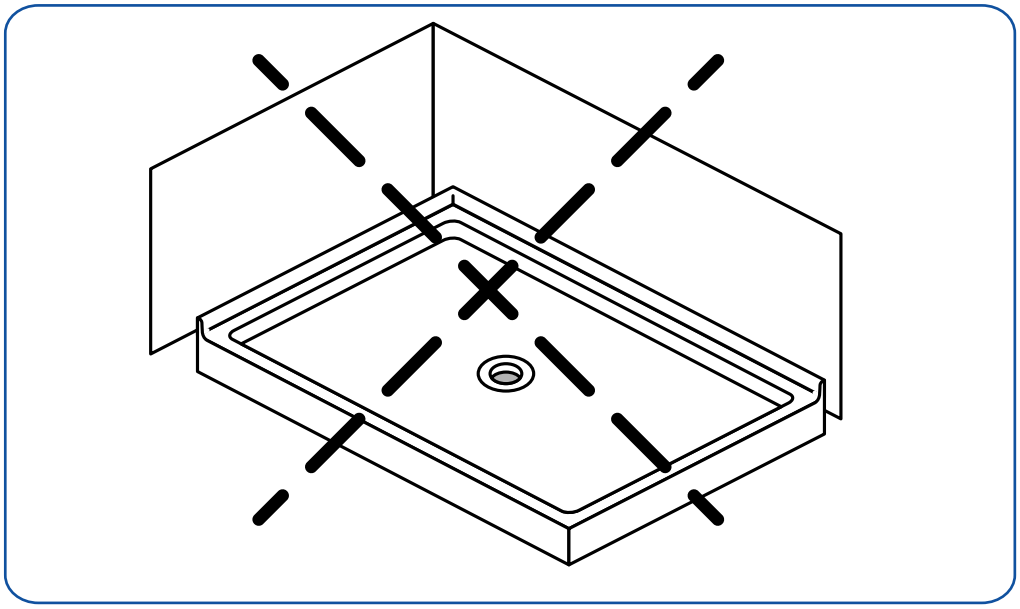

3. **[OPTIONAL]** For enhanced support and ease of shower door installation, it is recommended to include an extra 2”x4” stud in the wall structure.

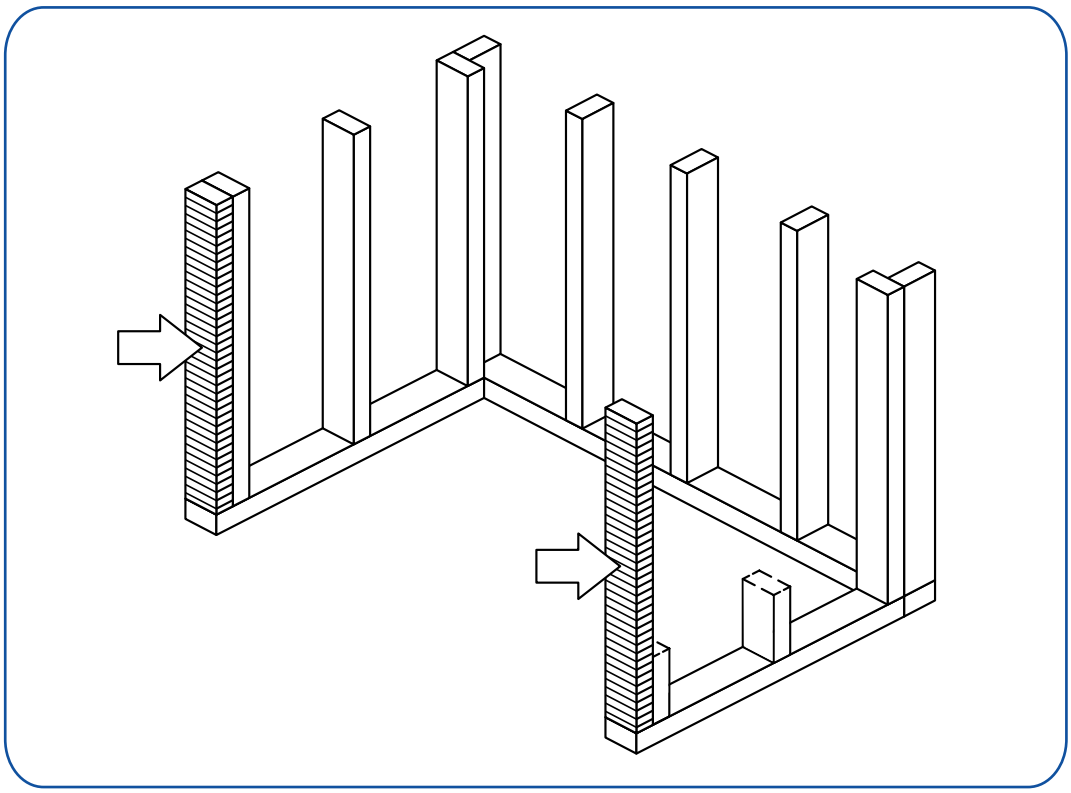

4. It is essential that the floor is level, clean, and smooth.

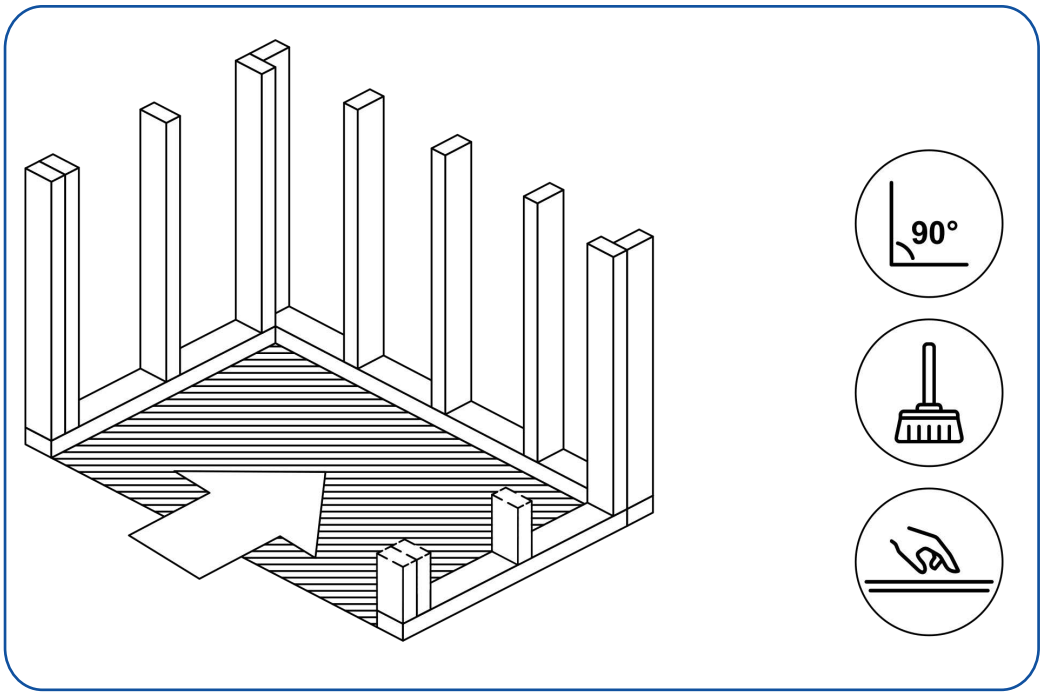

5. Place the shower base against the intended installation area.

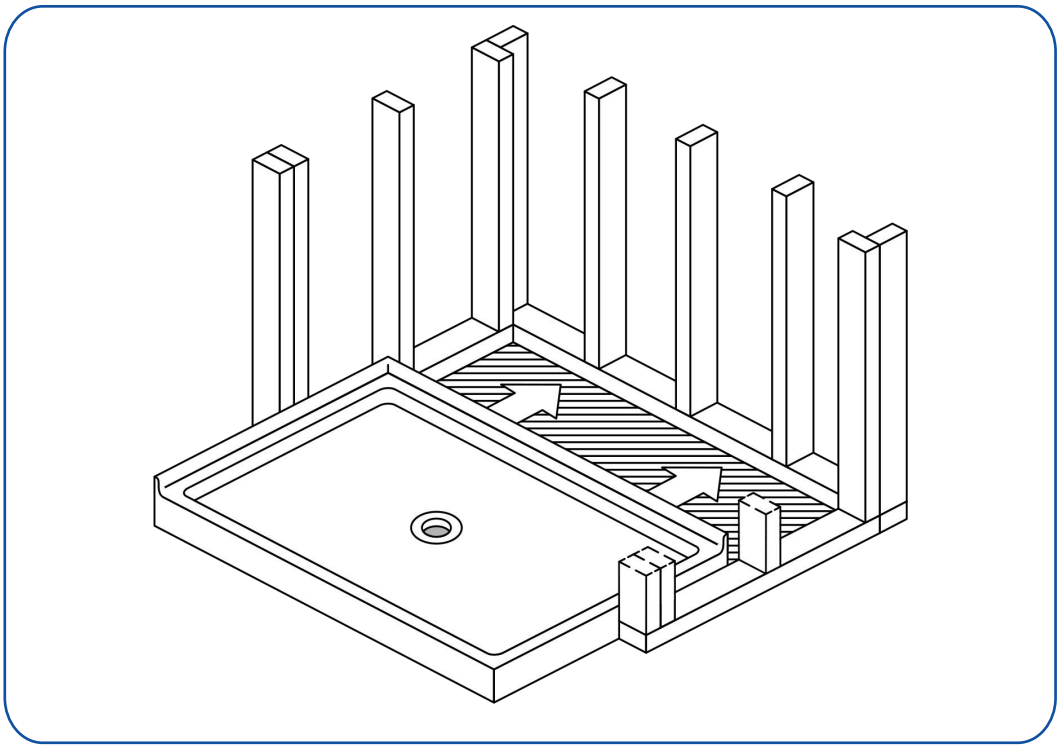

6. Use a leveling tool to confirm that the shower base is leveled on all four sides.

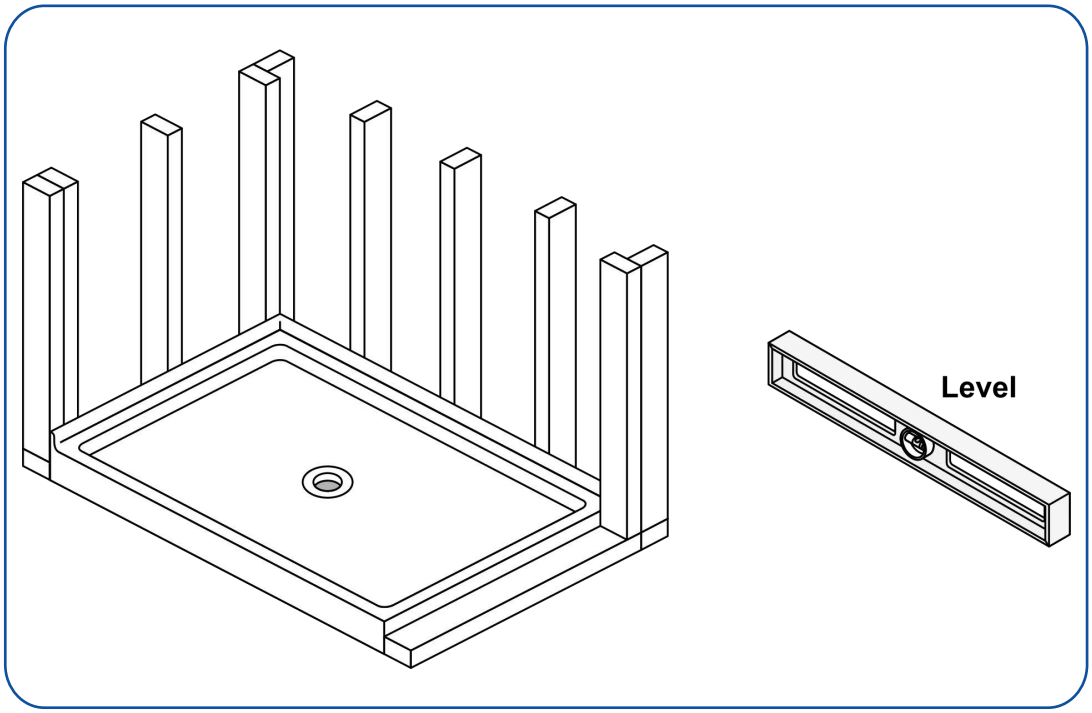

7. Mark the drain location.

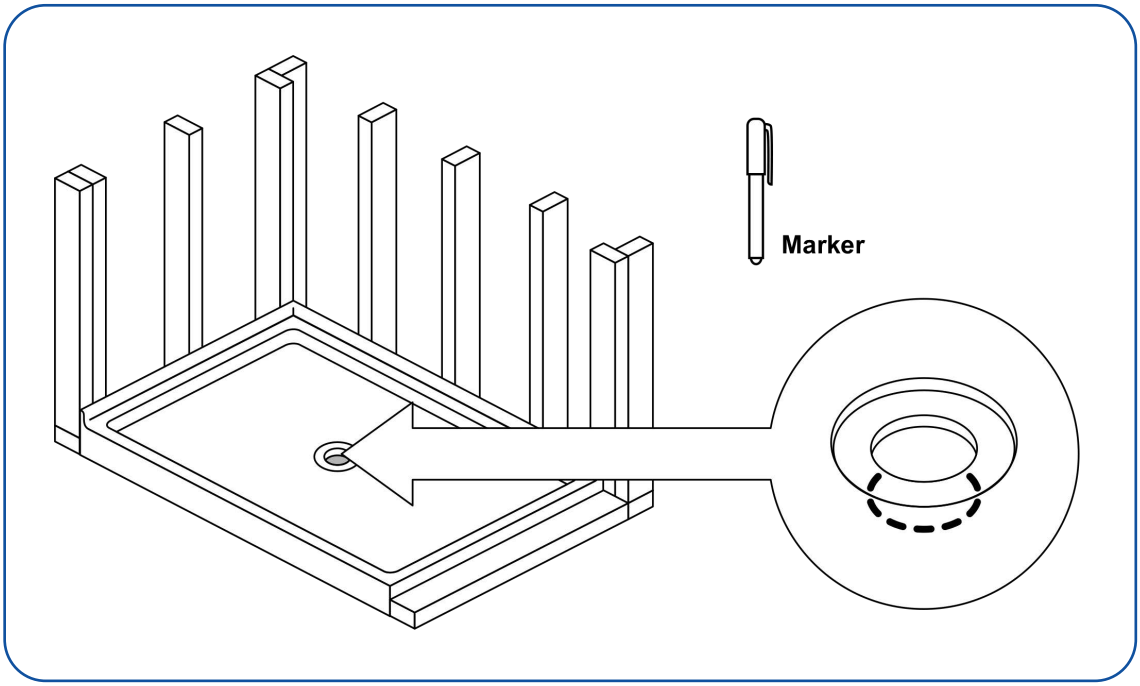

8. Make an opening in the sub-floor that is 5" x 5" and ensure that the 2" waste pipe is located centrally in the cutout and is raised at least 1/2" to 1 3/4" above the floor. Refer to the product specification sheet for the drain rough-in.

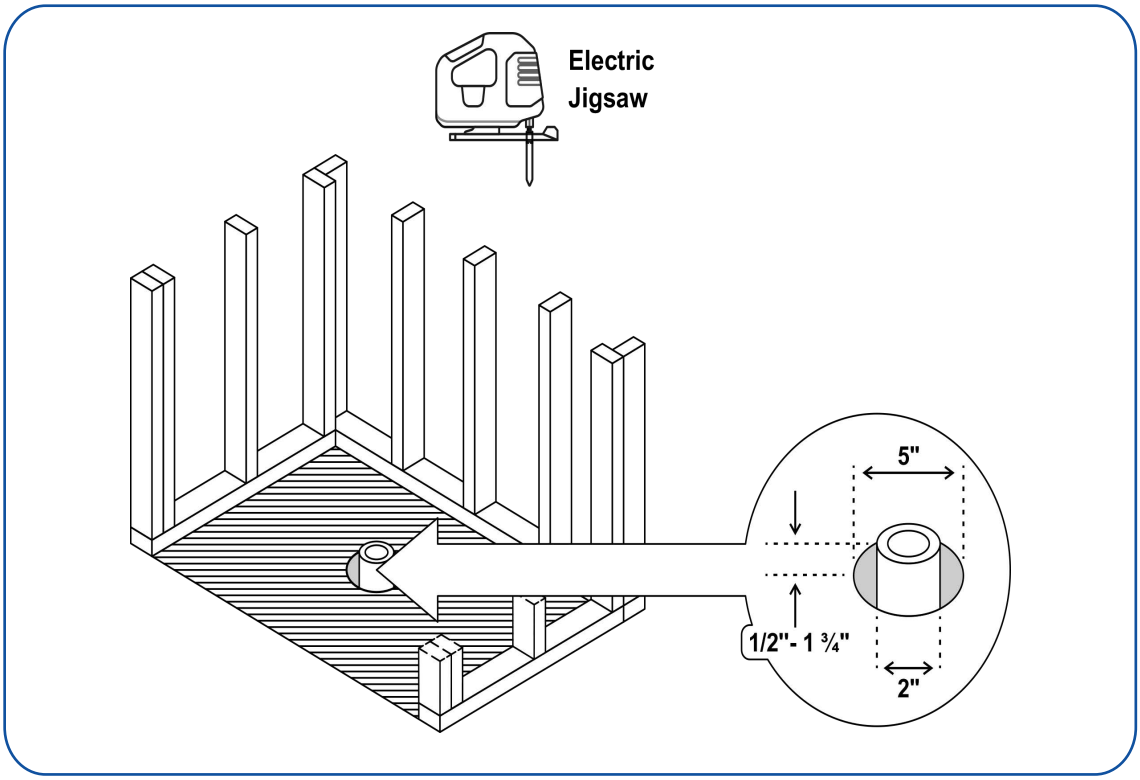

9. Remove the stainless-steel strainer, compression nut, compression wrench, and rubber compression gasket from the drain.

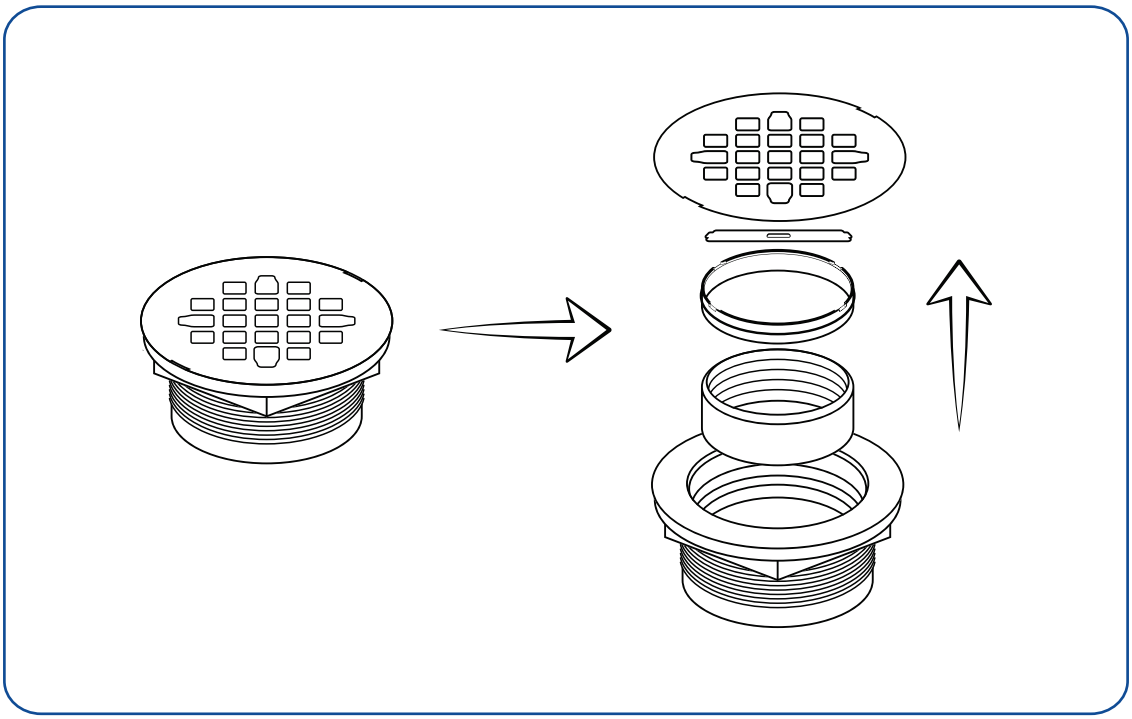

10. Take apart the locking nut and remove the rubber washer and the friction

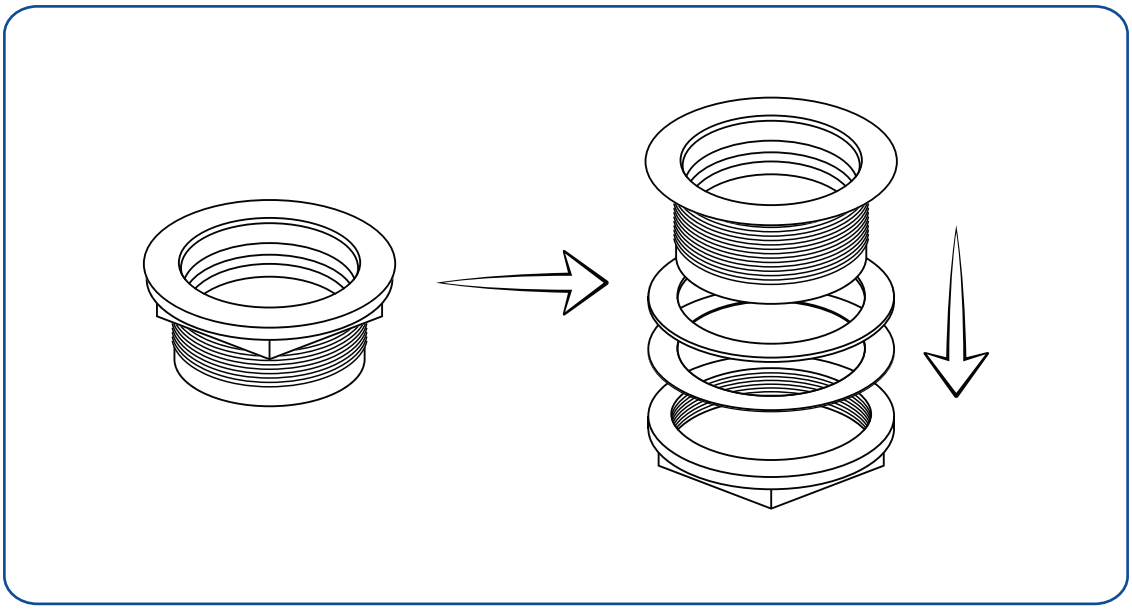

11. Take the drain body and run a continuous line of silicone along the underside lip. Additionally, apply a line of silicone around the drain hole in the shower base.

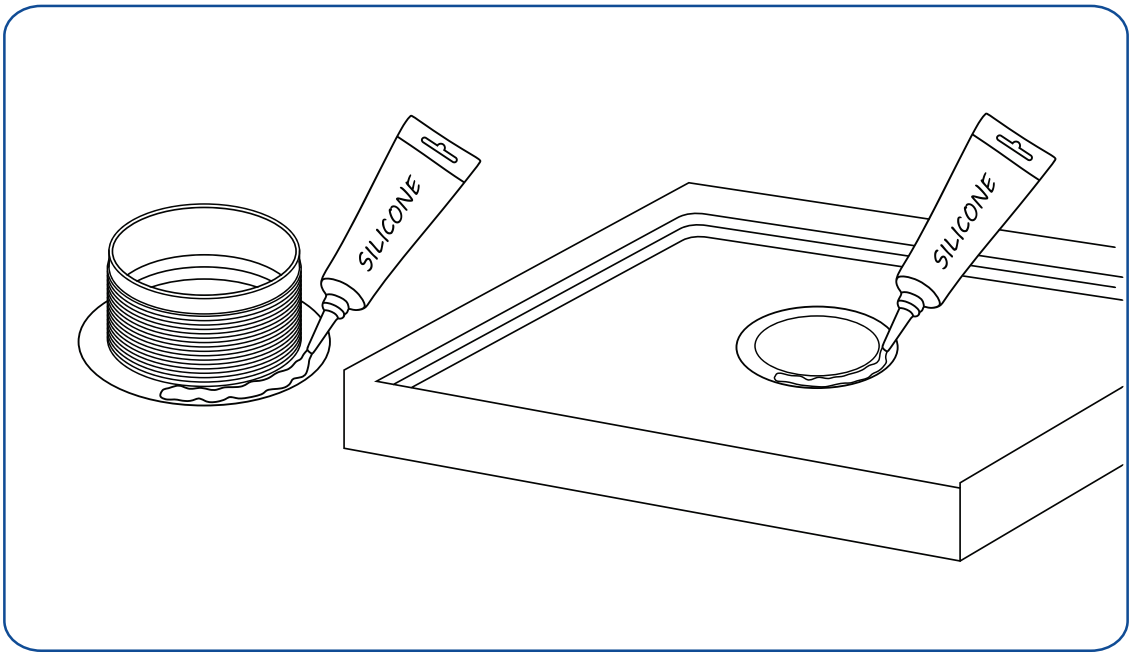

12. Insert the drain body into the drain hole of the shower base, pressing down as firmly as possible without twisting.

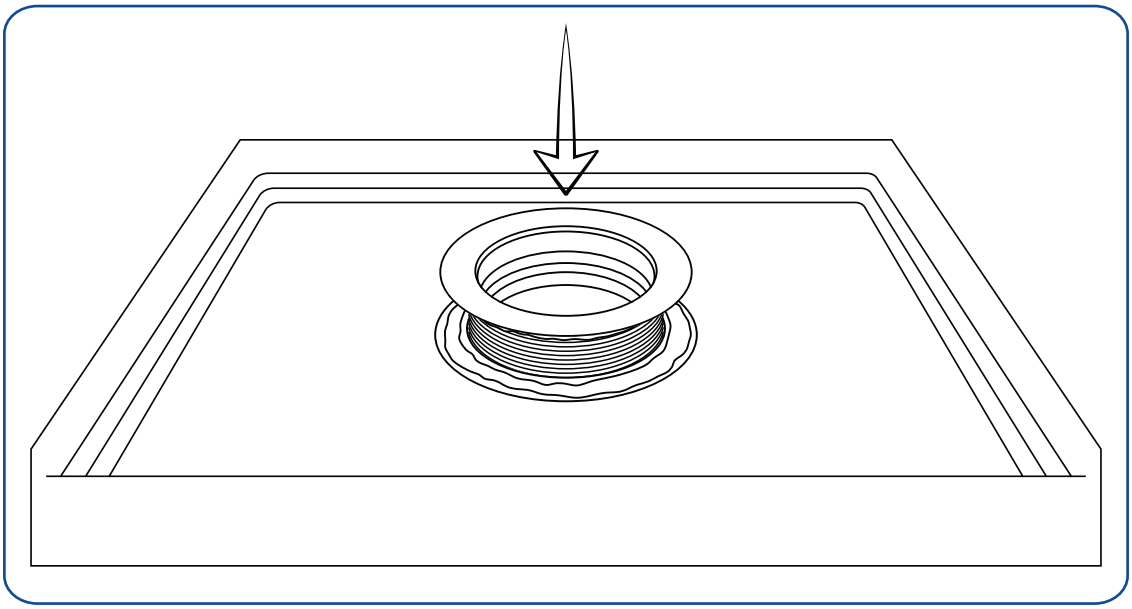

13. Attach the rubber washer to the drain body from the underside of the shower base.

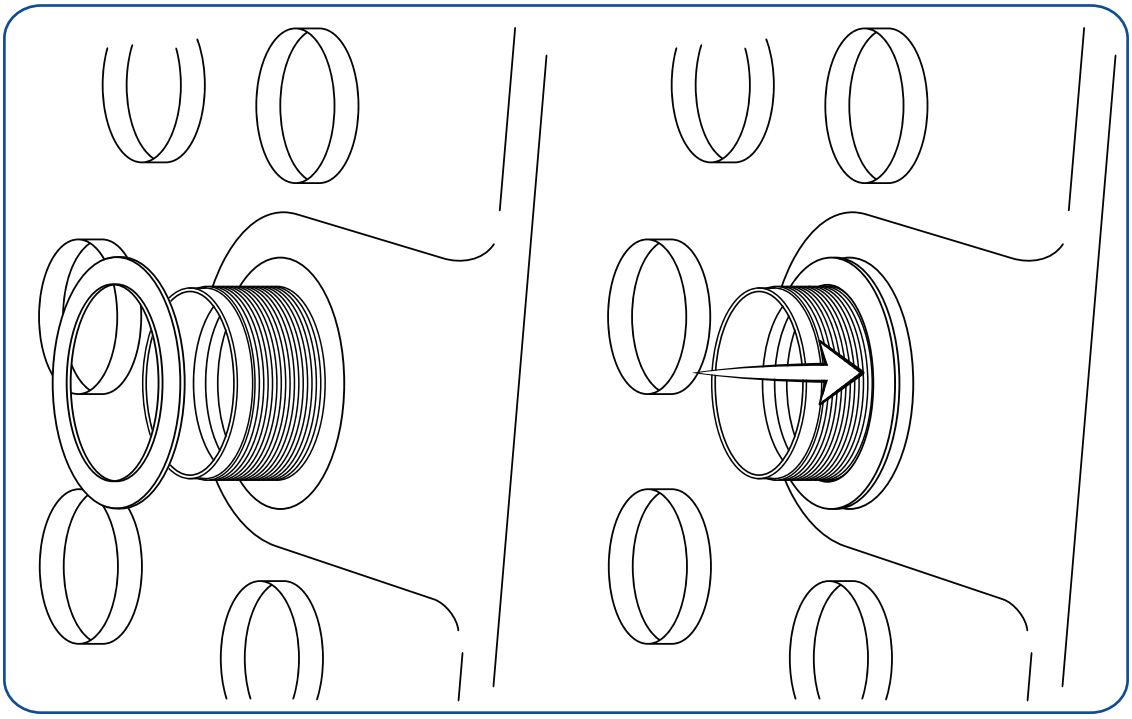

14. Next, attach the friction washer to the drain body.

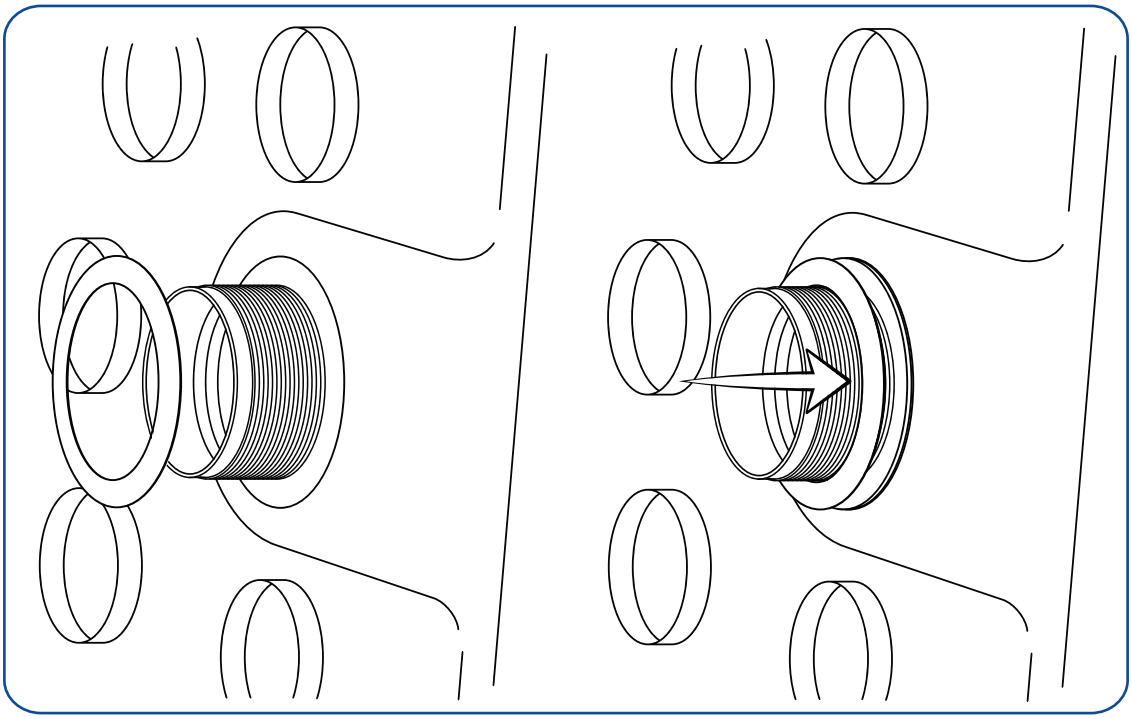

15. Secure the drain by threading the locking nut onto it and then tightening it with adjustable pliers or by hand.

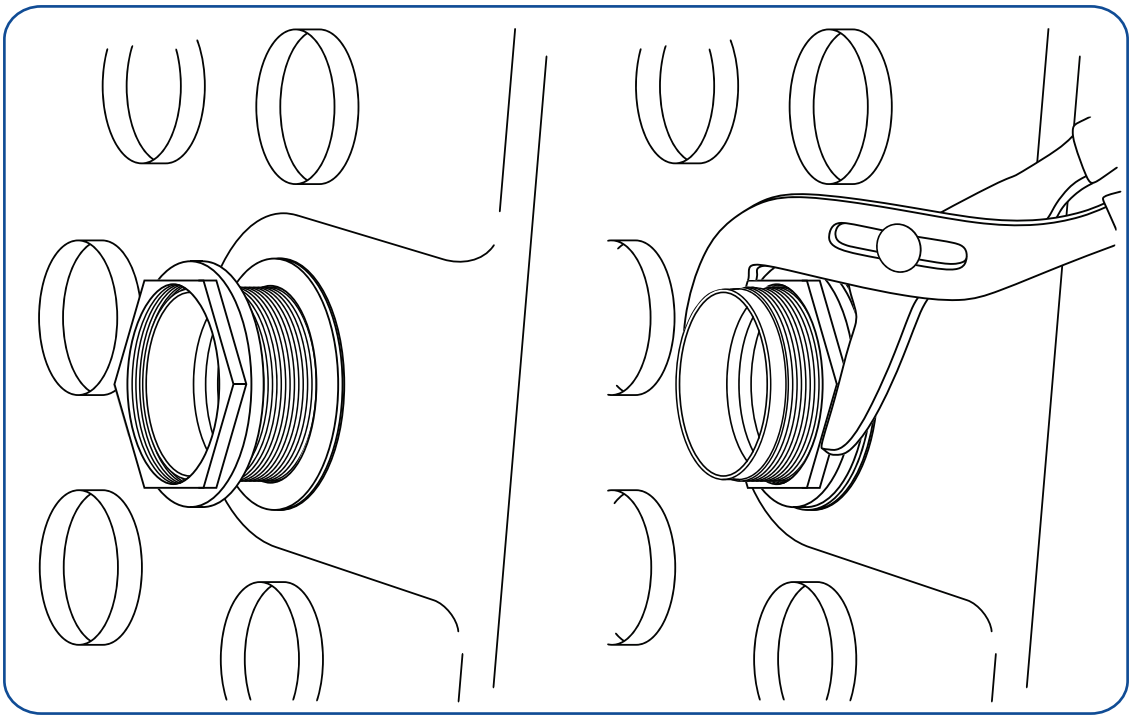

16. Remove any surplus silicone from the drain.

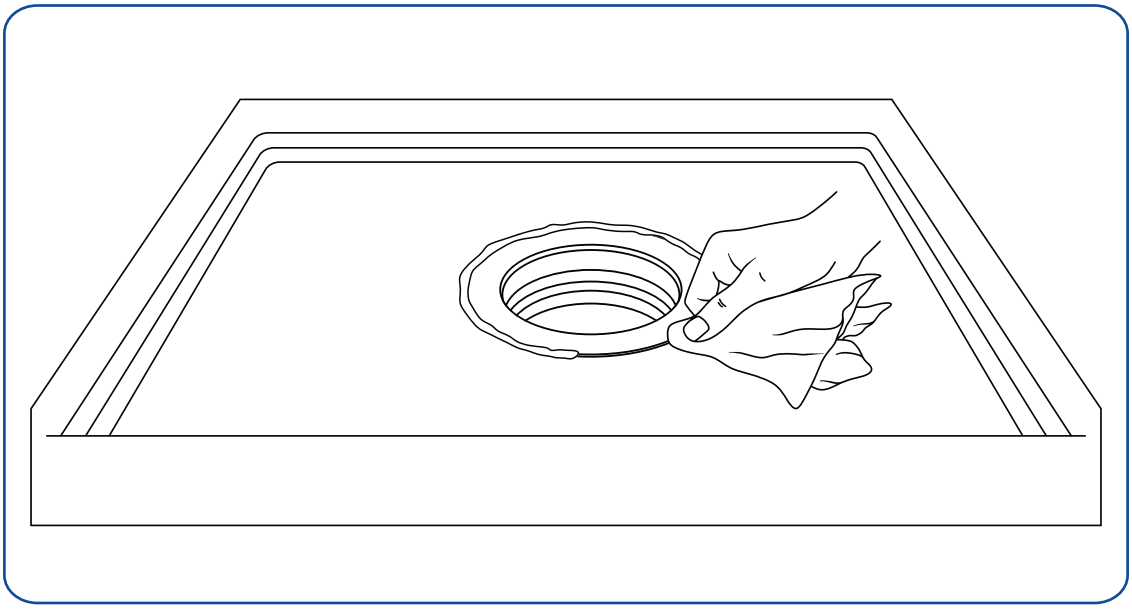

17. Carefully position the shower base back into the installation location, ensuring that the location of the drainpipe aligns with the actual location of the shower base drain.

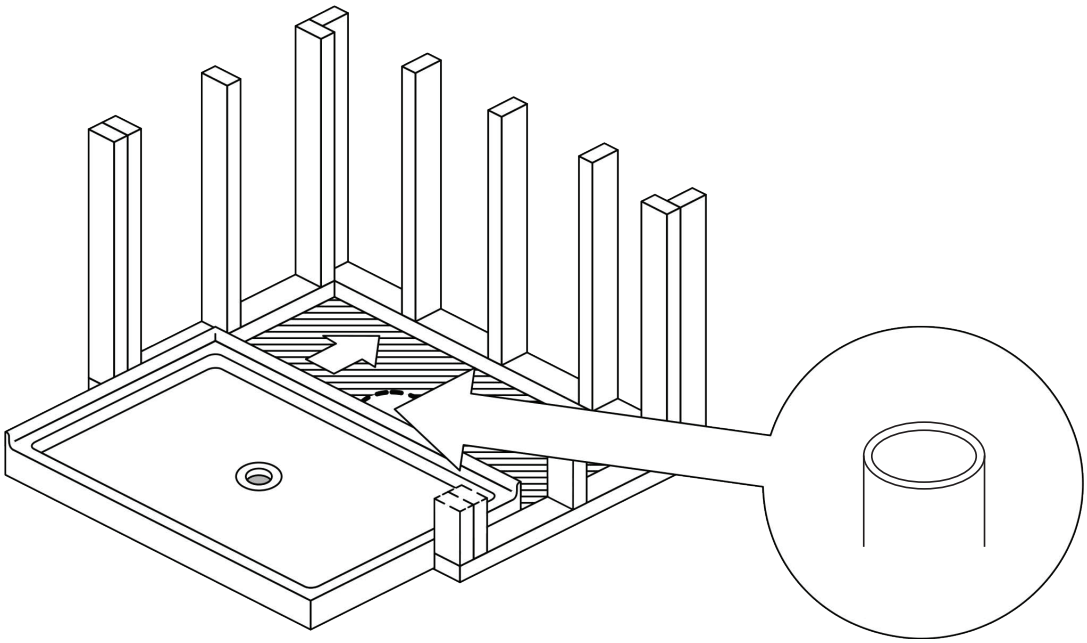

18. Position the rubber compression gasket over the drainpipe that protrudes through the drain, ensuring the beveled side faces upward. Apply firm pressure to the gasket until it reaches the bottom of the drain.

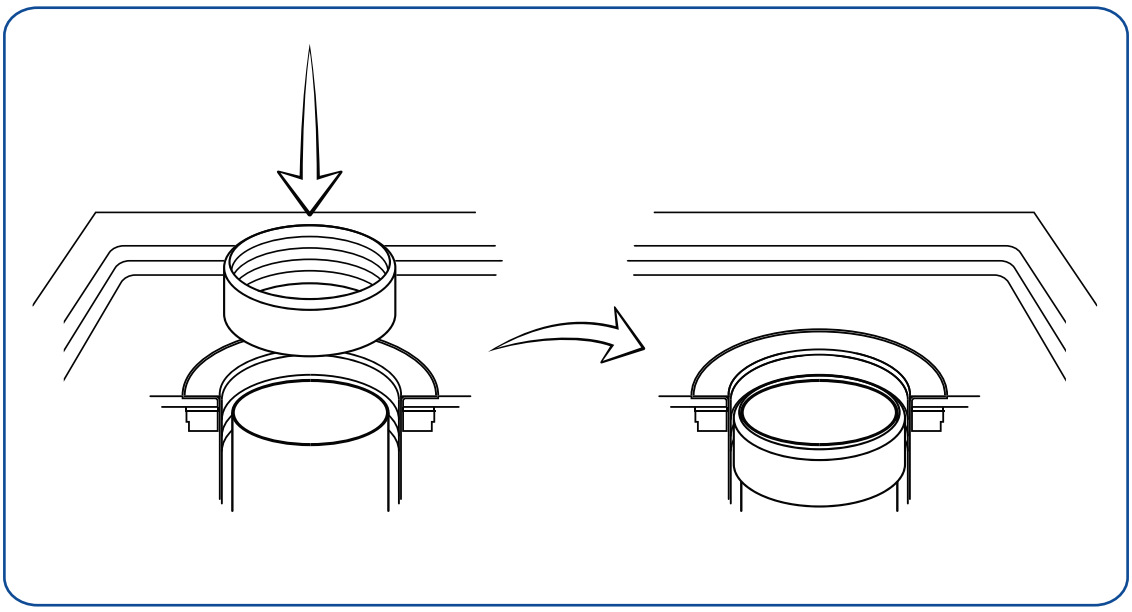

19 . Insert the compression nut into the drain body and utilize the provided compression wrench and a screwdriver to tighten it. Turn clockwise to secure it in place.

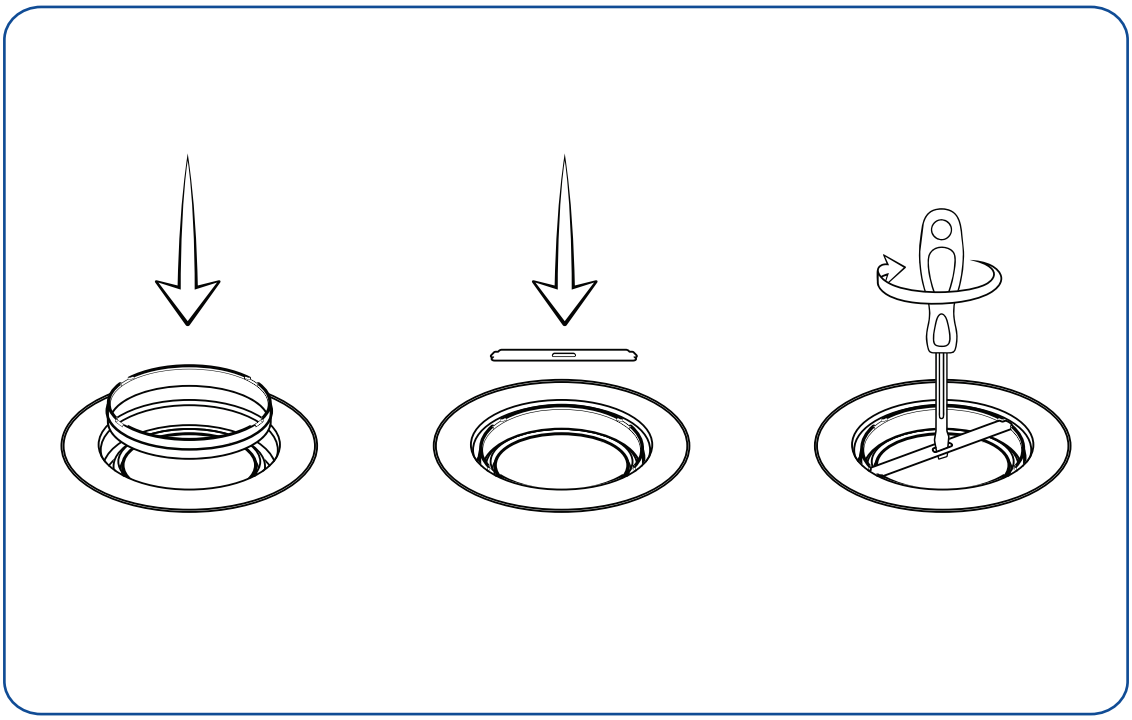

20. Align the stainless-steel cover with the grooves on the drain and firmly press it into place to ensure a secure fit.

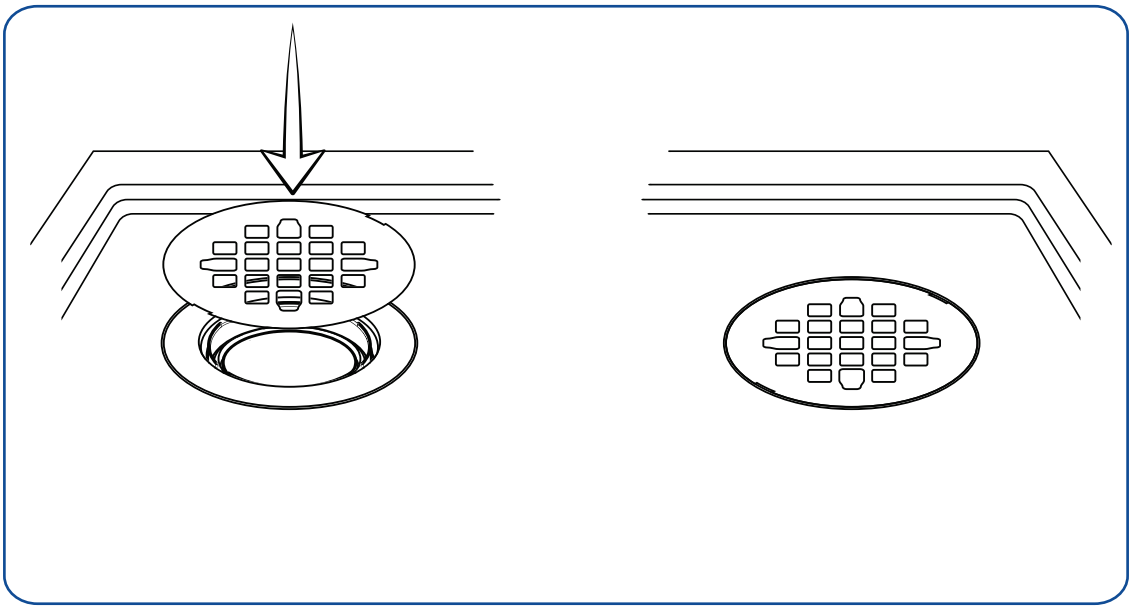

21. Once the drain is completely installed, verify proper drainage, and inspect for potential leaks.

22. Re-check to make sure that the shower base is level.

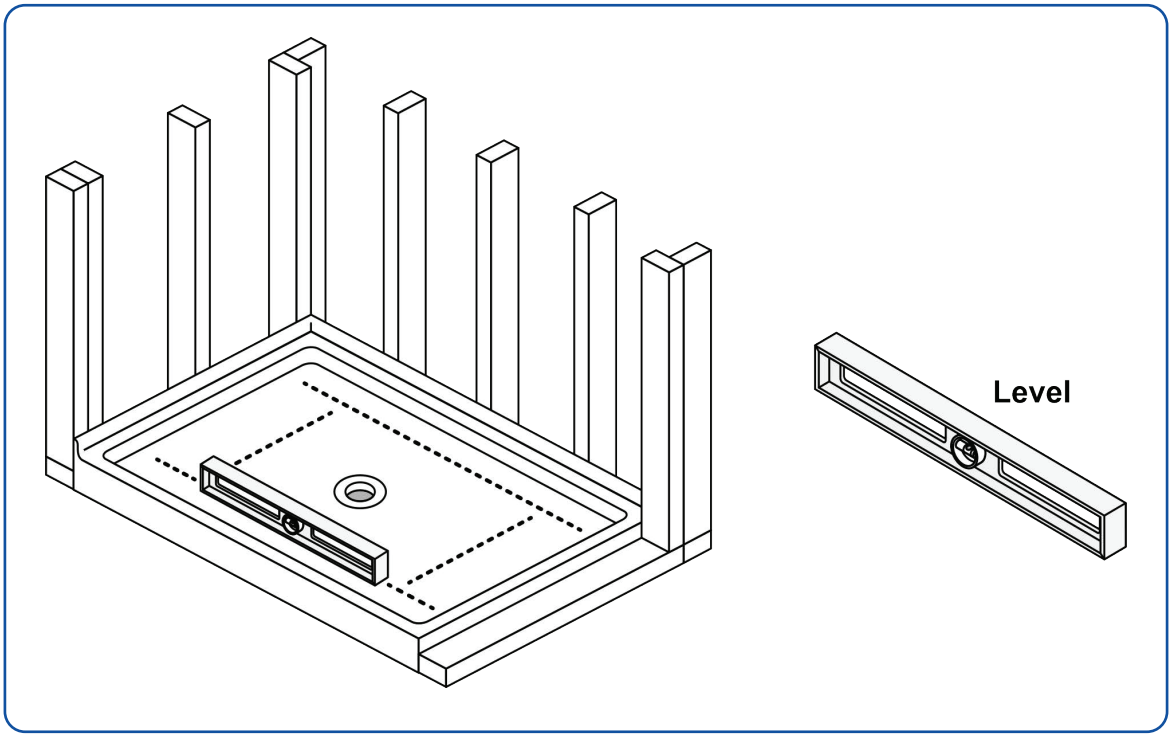

23. If the shower base is level, apply adhesive on the floor. Place the shower base in adhesive and adjust it until it is level. Place the shower base and ensure full contact with the floor, apply pressure, and level the base.

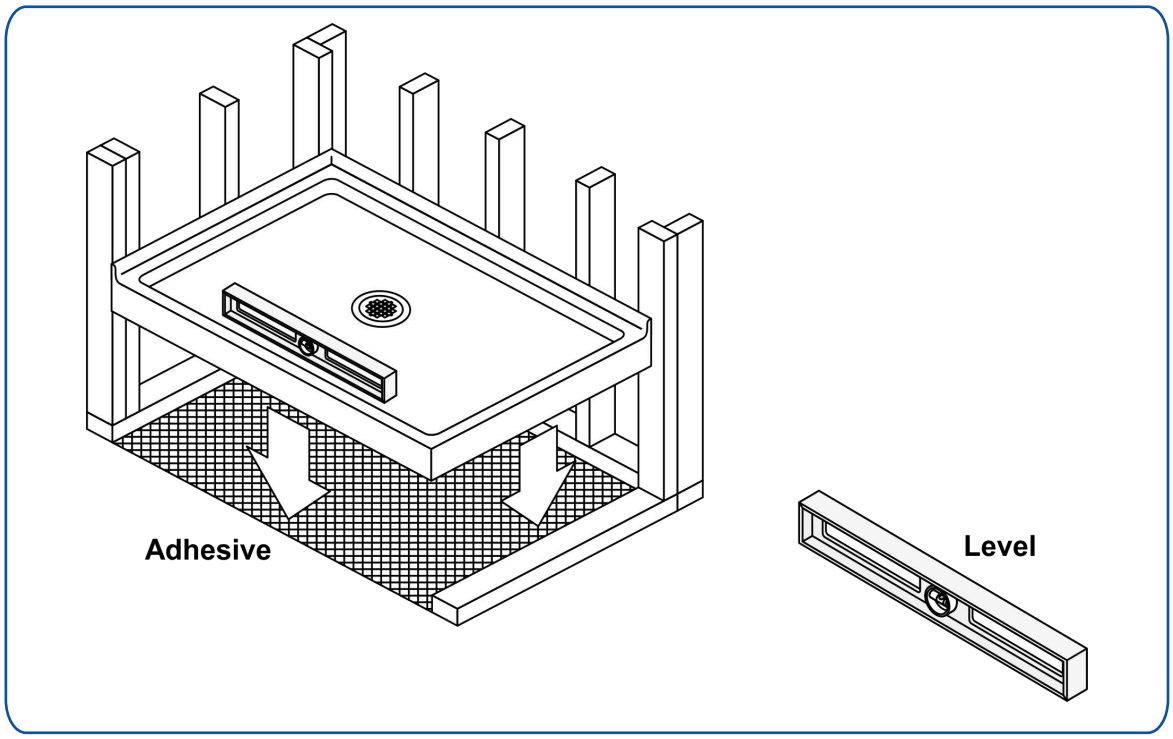

24. If the shower base is not level, a mortar base or a polyurethane-type construction adhesive may be used. **DO NOT USE CONCRETE.** Regardless of the chosen leveling compound for the shower base, it is essential that the entire bottom surface of the base makes contact with the compound.

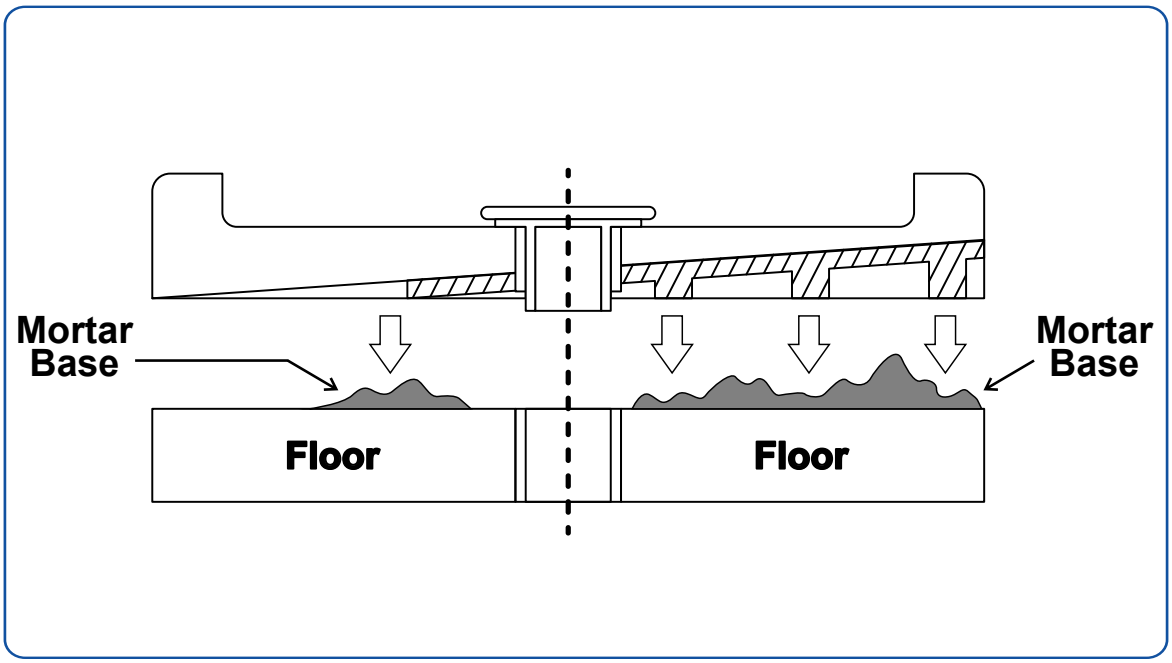

25. If applying a mortar bed, we recommend a thickness of 1” – 1 ½”. The thickness of the material will fluctuate depending on the floor's condition and the degree of irregularity on its surface. We suggest placing a **THIN POLYETHYLENE SHEET**, approximately 1/16" or 2mm thick, over the mortar to prevent the shower base from becoming permanently adhered to it.

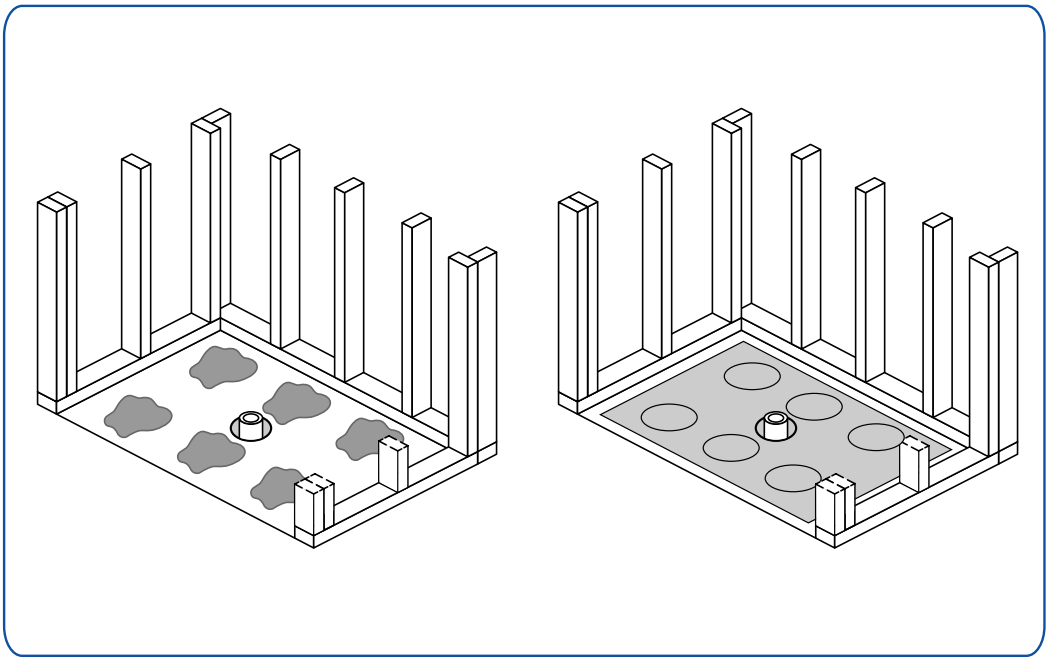

26. Ensure that the mortar bed is spread evenly throughout the installation area using a mortar base. Make sure to avoid any contact between the mortar and the drain during the installation process. Avoid applying mortar within a 5-inch radius of the drain area.

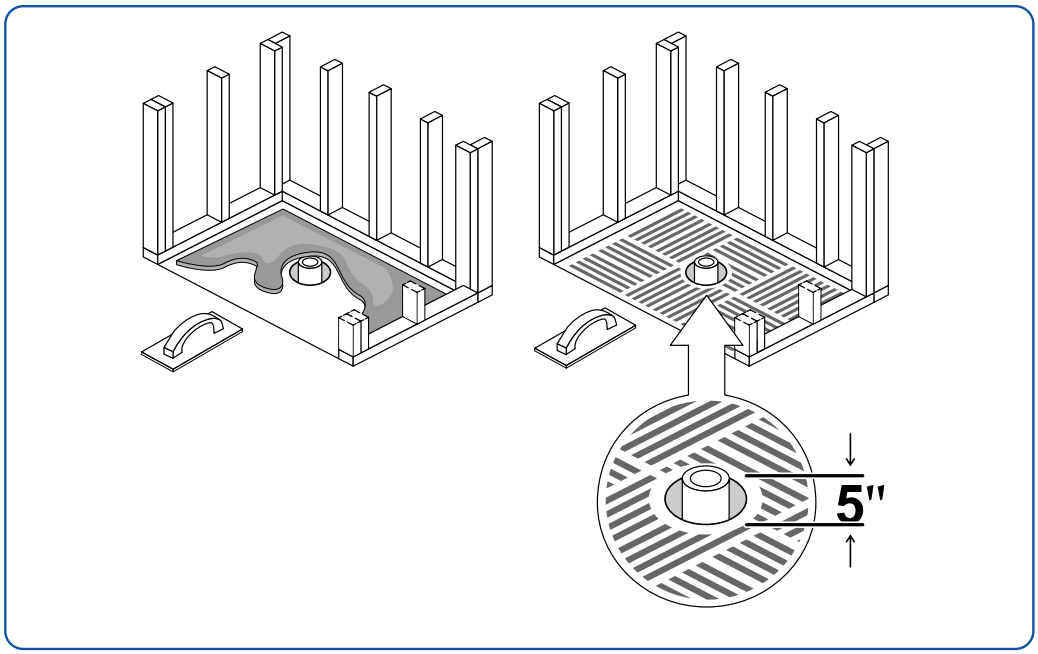

27. Once the bedding material has been poured and before it sets, place the shower base into the installation space, ensuring the drain assembly slides over the waste pipe. Press and level the base into the bedding material.

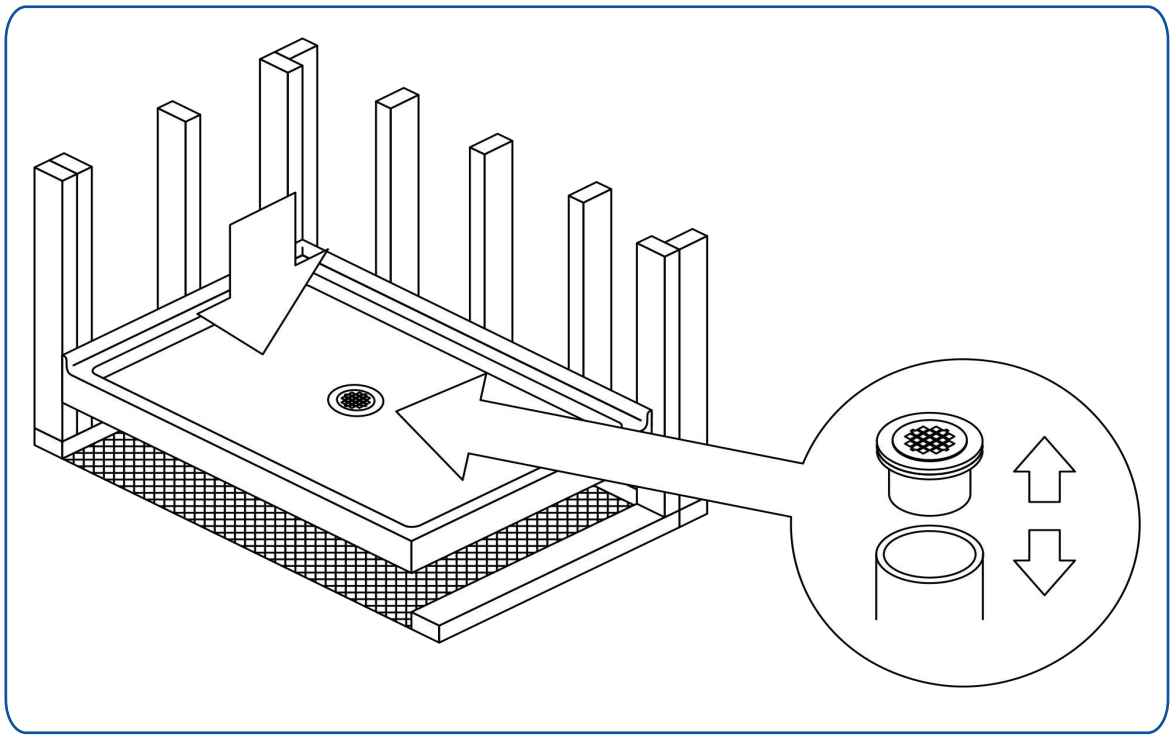

28. Center the base in the installation location.

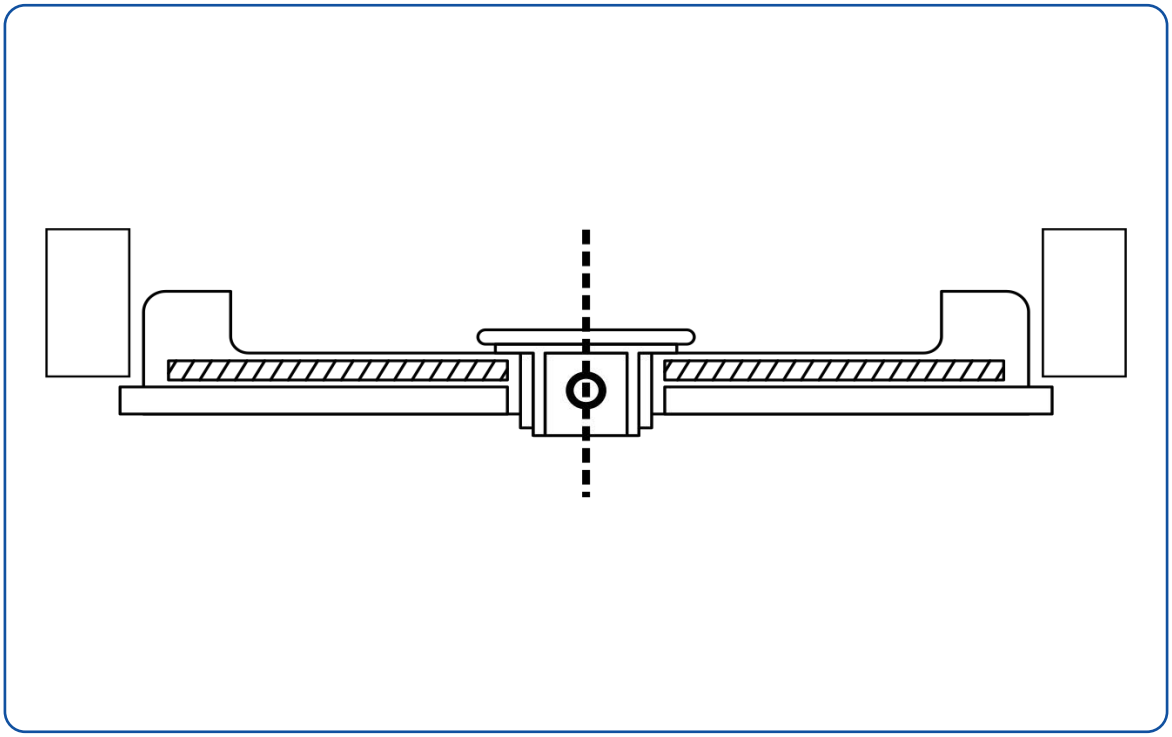

29. Ensure that the front of the base is in complete contact with the floor along the entire length of the shower base.

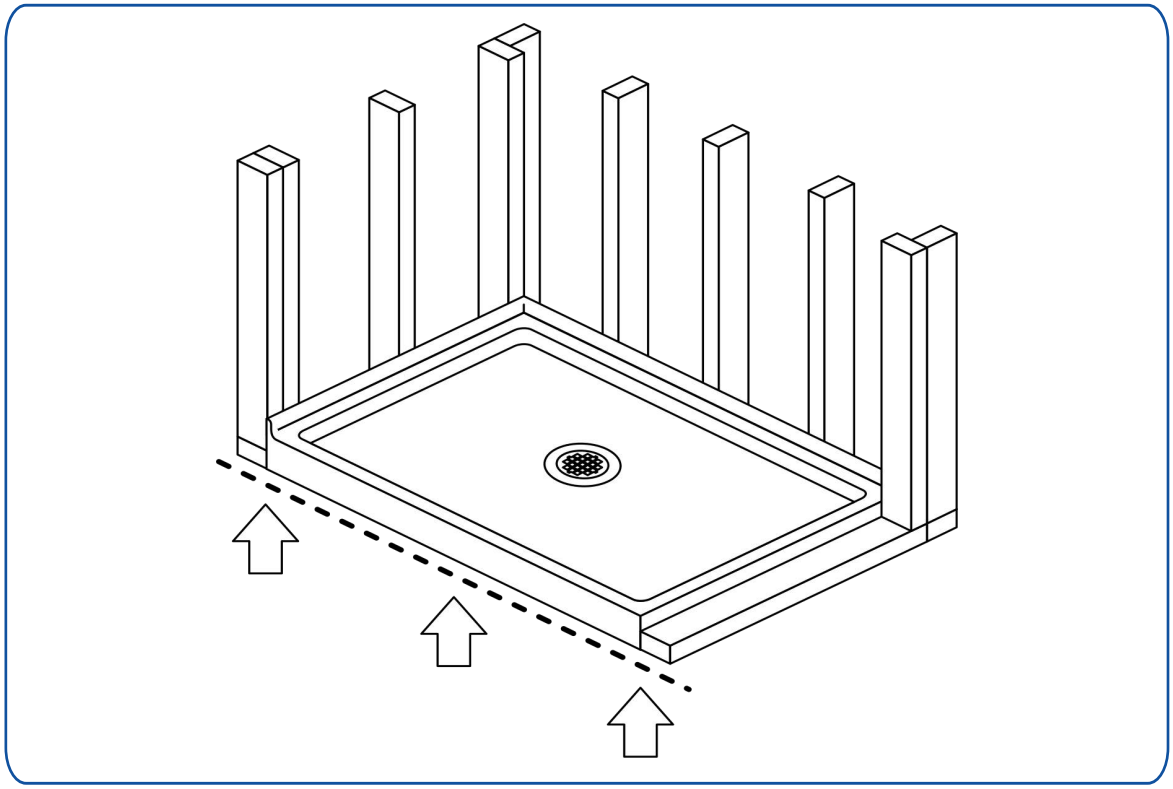

30. Re-check to make sure that the shower base is level.

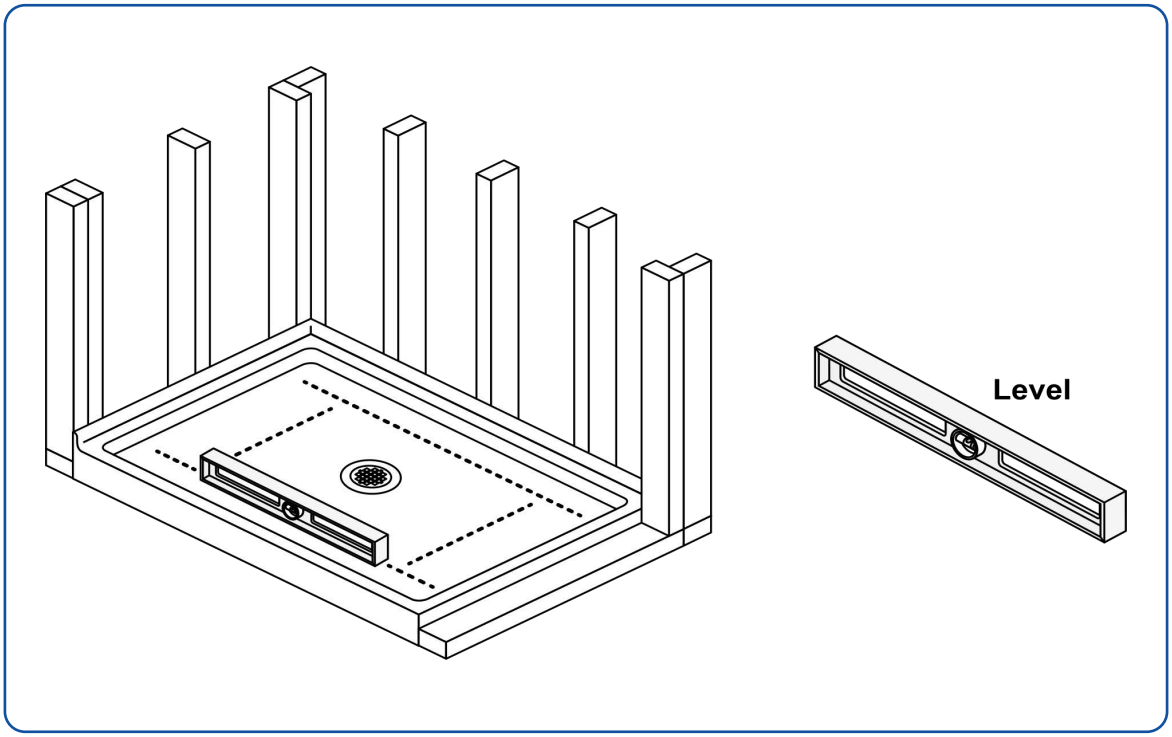

31. If the alcove is larger than the shower base, use shims or furring strips between the base and studs to ensure a snug fit. Please ensure the gaps between the flanges and stud are smaller than 1/8" after shimming.

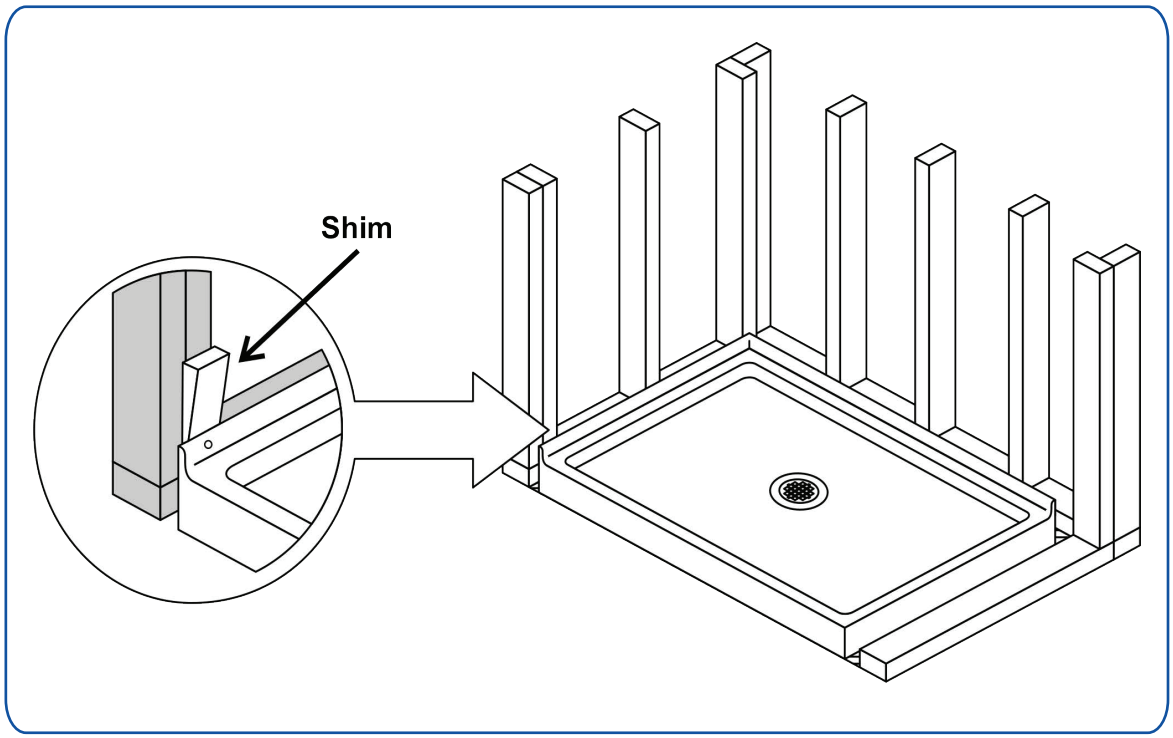

32. To avoid causing damage to the shower base, it is recommended to use a 3/16” (5mm) drill bit for pre-drilling holes in the flanges when securing them to the studs. Make sure to drill holes in the flange only from the inside. Avoid pre-drilling the studs and refrain from directly drilling holes into them.

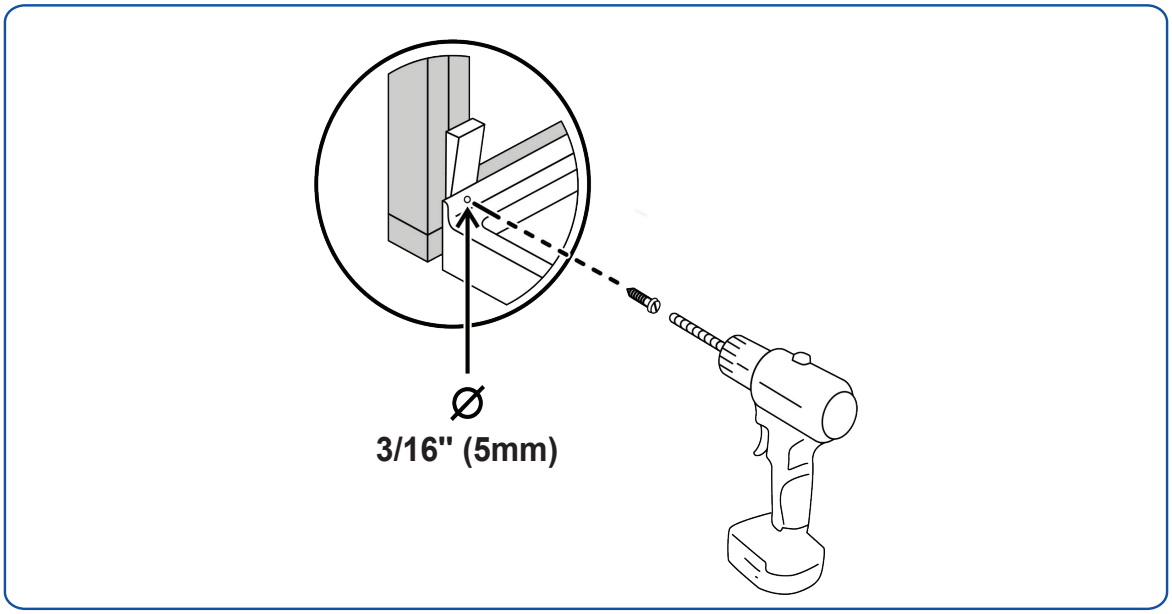

33. Ensure that the bottom of all holes in the flange is positioned at least 3/8"(8mm) above the base threshold. Before tightening, it is crucial to fill these holes with silicone.

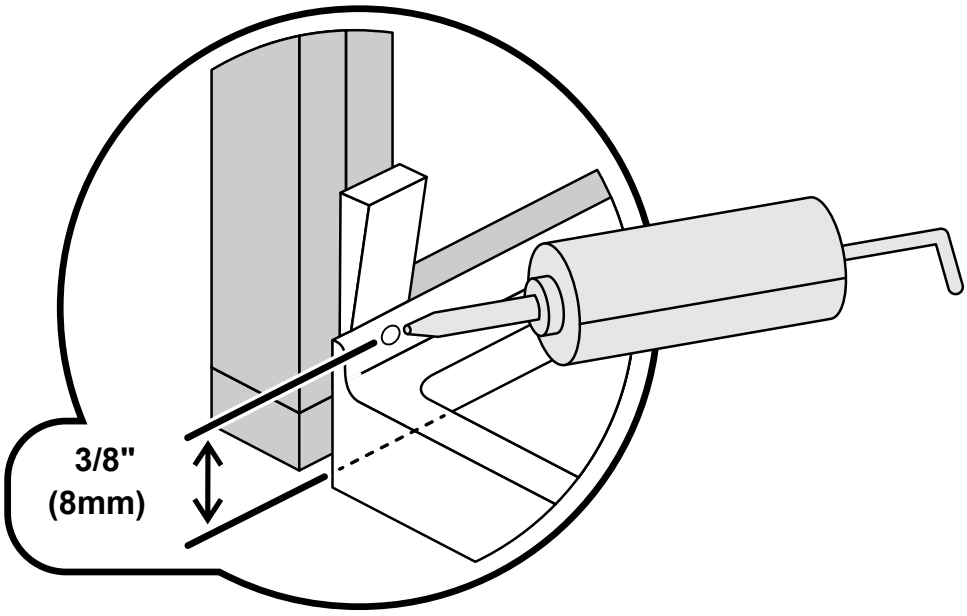

34. Do not use drywall screws to secure flanges to wall studs. Product damage will occur and will void the warranty.

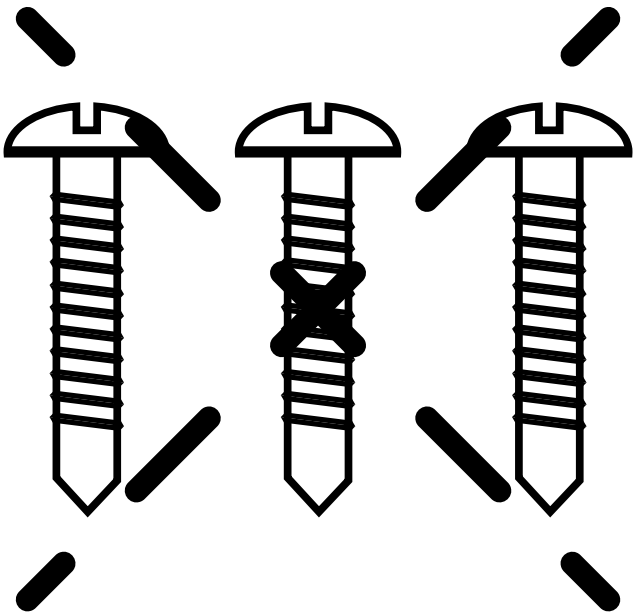

35. After securing the flange to the studs, trim off any excess wood from the shims.

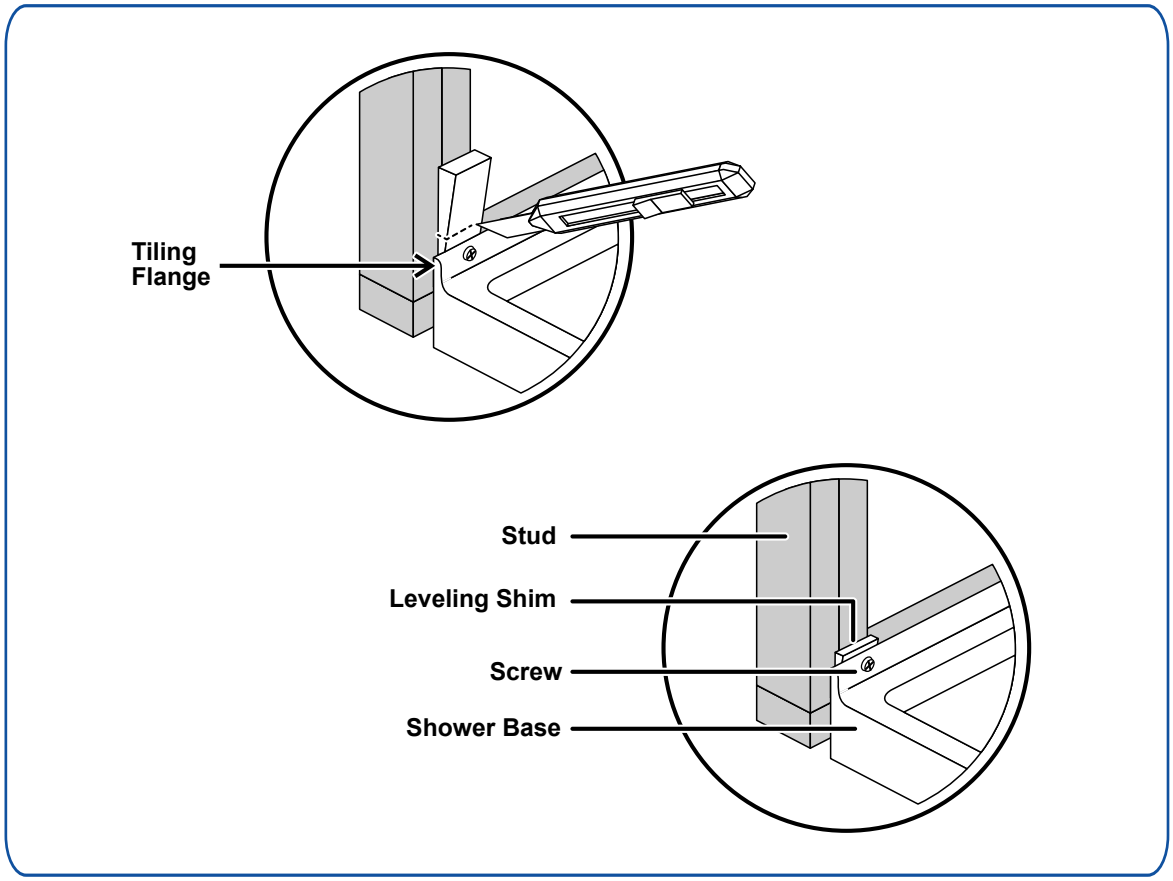

36. You should allow the mortar bed to settle for a period of 24 hours before proceeding with any additional work.

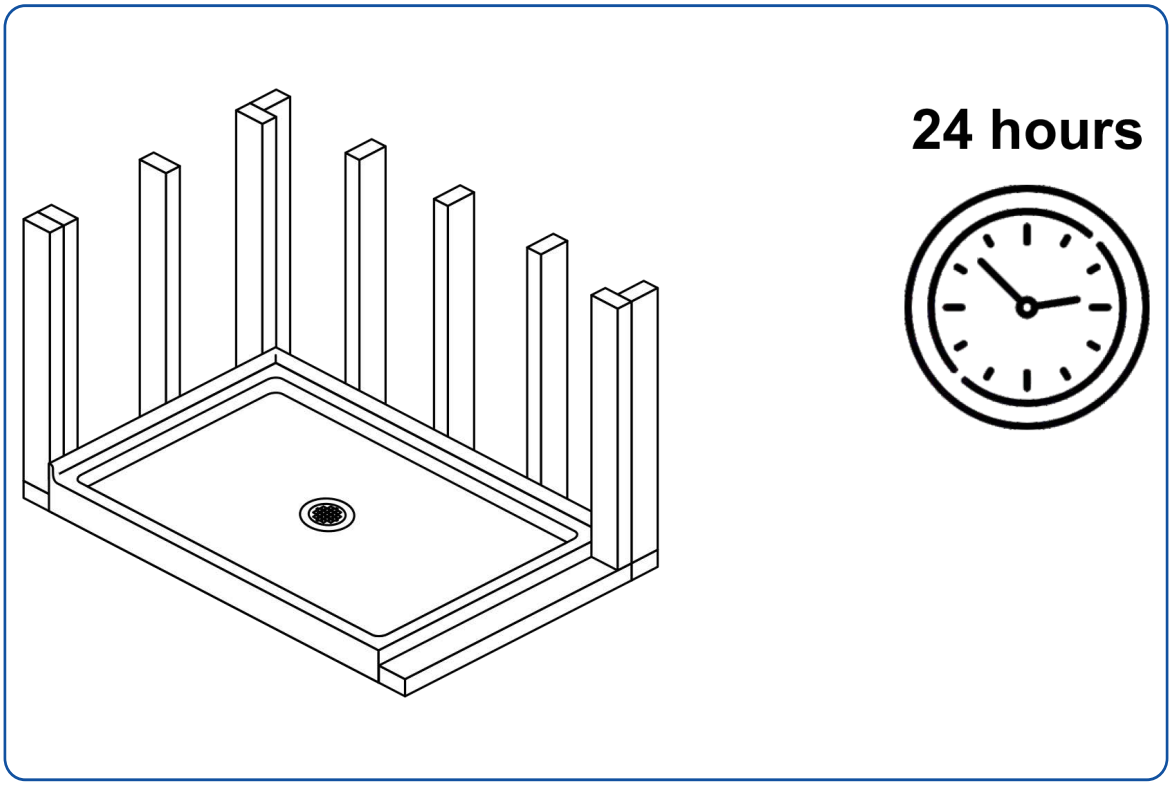

37. Wait until the bedding material is entirely hardened before placing any weight on the bottom of the shower base.

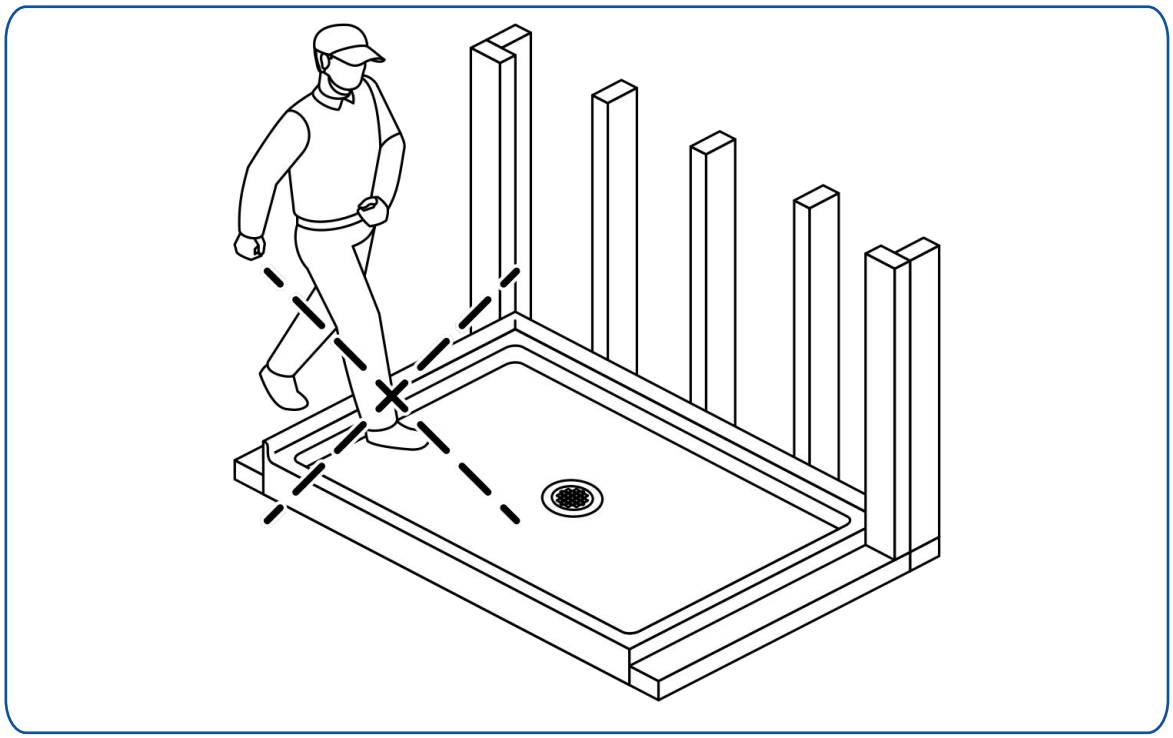

38. Conduct a water test of the drain and plumbing to ensure there are no leaks.

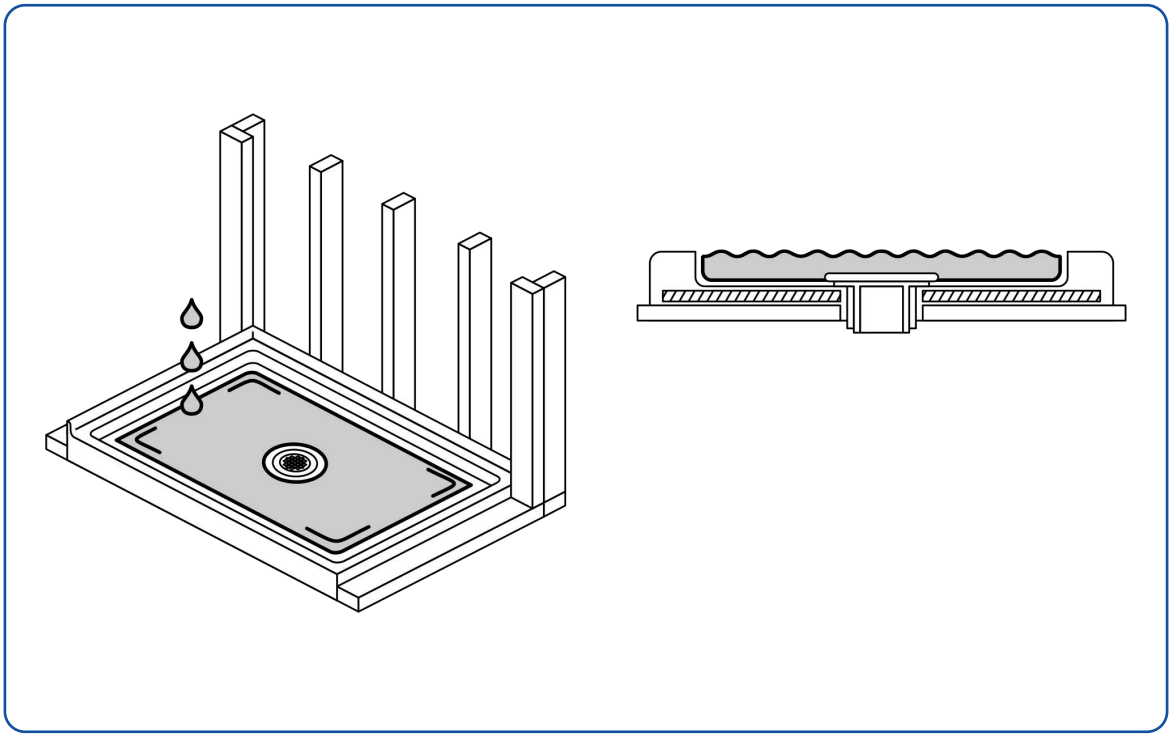

39. Follow the appropriate local plumbing code and guidelines to install the drywall.

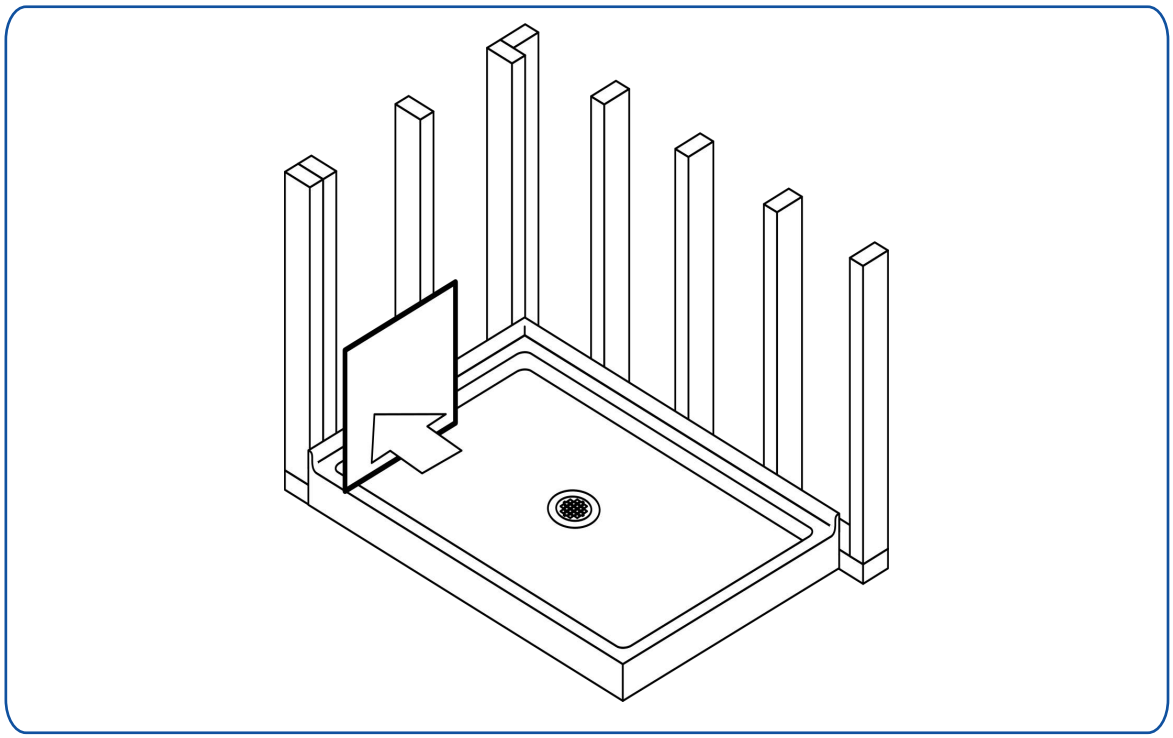

40. Apply the drywall and tile or alternative material to the walls and/or floor according to the manufacturer's instructions.

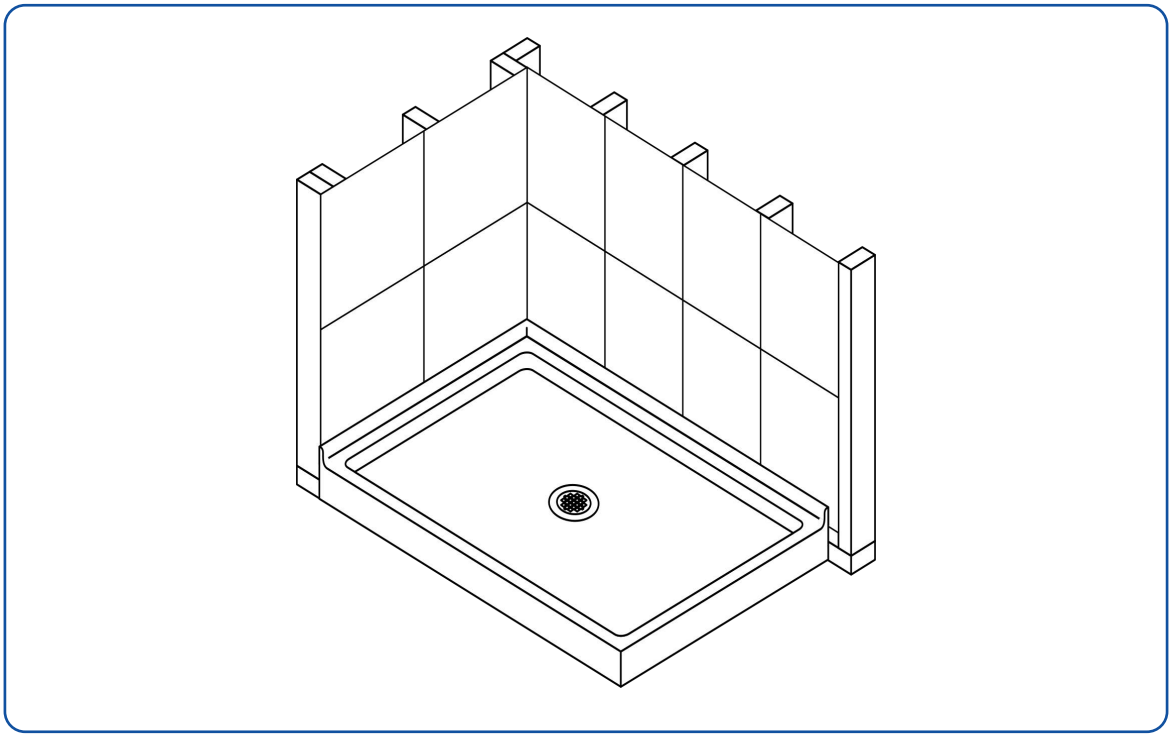

41.Leave a 1/8" gap (3mm) between the finished material and the lip of the flange. Use 100% silicone to caulk and seal the gap.

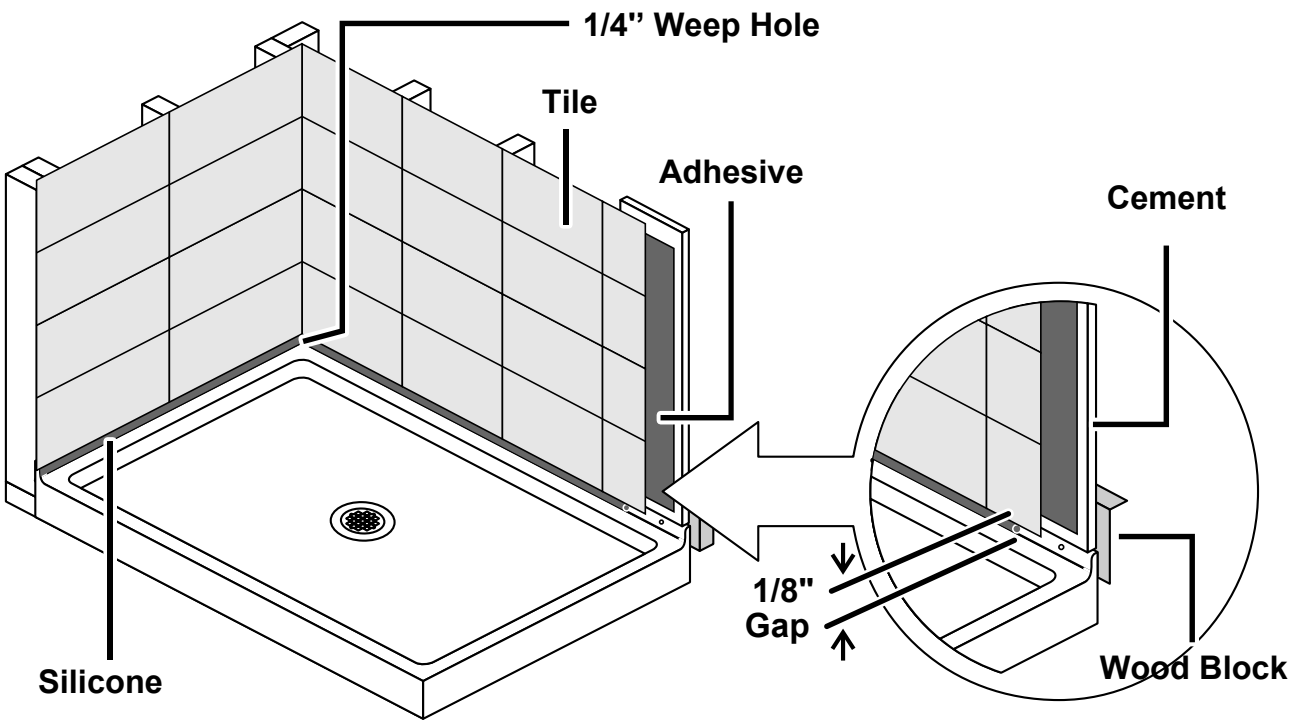

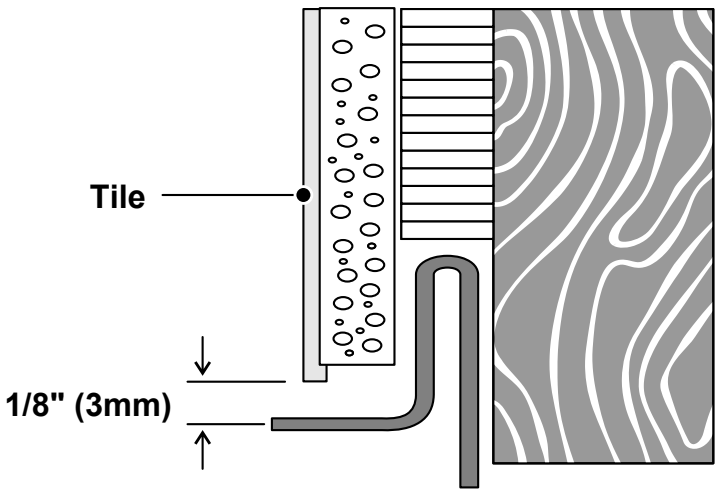

42. Leave a minimum ¼"-1" weep hole at the back and front corners of the shower base. Weep holes serve the purpose of enabling drainage for any leakage that may occur through unsealed tiled grout. **DO NOT FILL THE HOLES.** By filling it, you will effectively hinder the drainage of moisture back to the base through the weep holes.

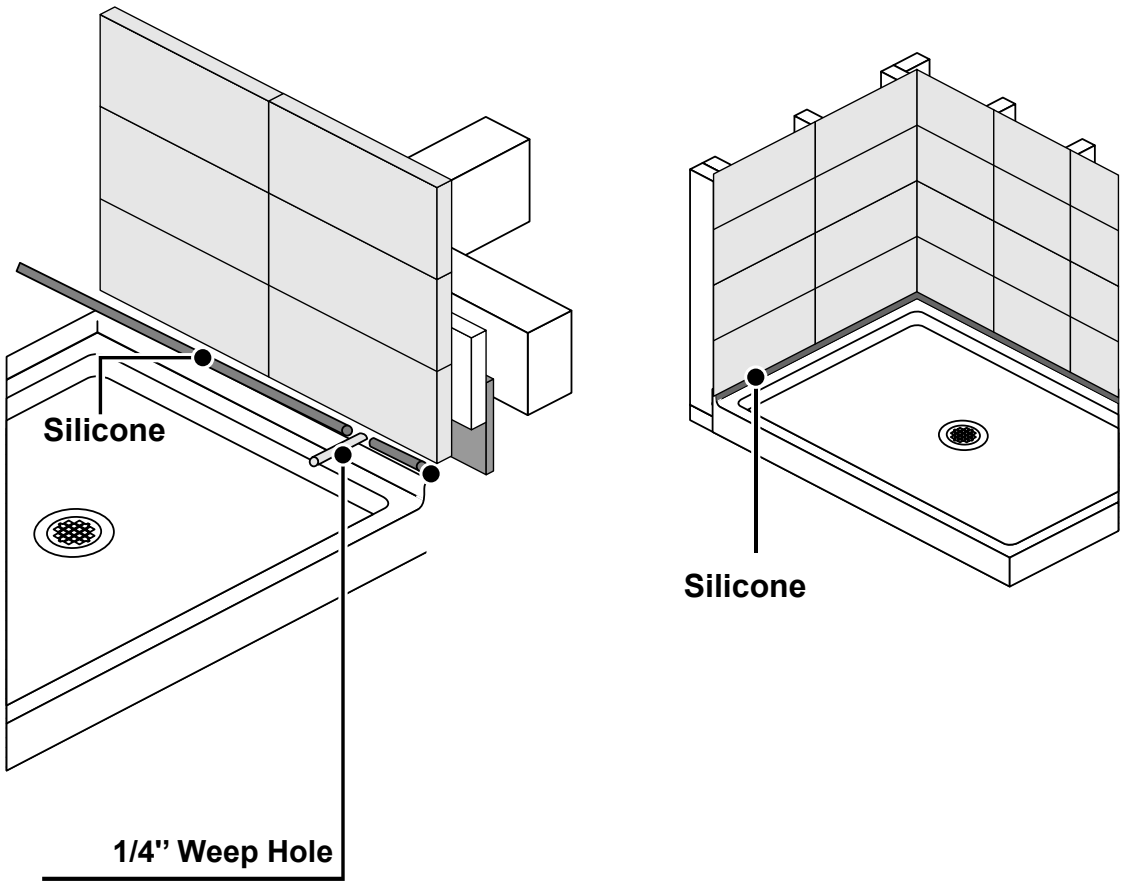

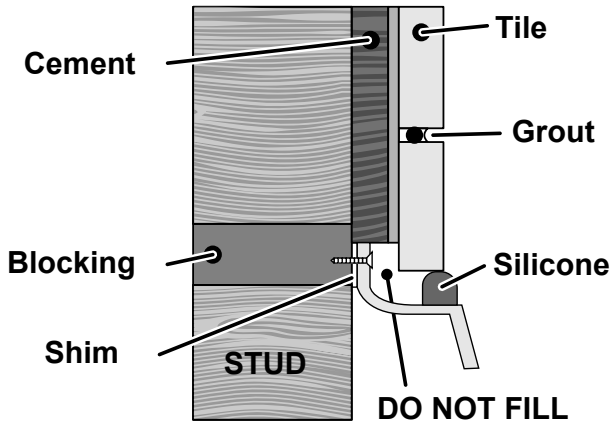

Product Care

- To eliminate soap residue and mineral deposits from the surface of the shower base, use warm water, a soft sponge and a mild liquid detergent or non-abrasive cleaner.
- Do not use abrasive cleaners, scrapers, metal brushes, or anything that might scratch or dull the surface.
- Avoid using harsh chemicals on the surface of the shower base.
- Do not utilize cleaning products labeled "NOT SUITABLE FOR USE WITH ACRYLIC" on the shower base.
- Prevent the surface from encountering products like acetone, dry cleaning solution, lacquer thinners, and other similar substances.
- Refrain from using razor blades or other sharp tools that could cause scraches on the surface
- Avoid using aromatic solvents.
- If the grout or caulking in your shower crumbles where the walls meet the tub or shower floor, reapply the caulking as soon as possible to avoid water damage.
- If a rubber mat is utilized on the shower base, it must be removed immediately after each use.
- For tougher-to-reach places, we recommend using a soft-bristled brush to scrub in between these areas.
- It is not advisable to apply wax to areas where you frequently walk or stand.

Scratch Removal

- To eliminate minor scratches, apply a thin layer of automotive paste wax and lightly buff the affected area with a clean cloth.

- To address small scratches, use wet/dry sandpaper with a 600-grit rating to lightly sand the surface.

- For repairing deep scratches on your shower base, opt for higher-grit sandpaper, such as 1,500-grit wet/dry sandpaper. Start by moistening the sandpaper, and then use gentle circular movements to rub it over the affected area until the scratches vanish. Make sure to sand the surrounding area as well to blend the repair scamlessly and achieve an even surface.

- After sanding, use a towel to wipe away any dust from the sandpaper and dry the acrylic surface. Then, apply a quarter-size amount of automotive polishing compound onto a separate washcloth. Rub the compound gently in circular motions over the shower pan until the sanded acrylic surface shines and no residue of the compound remains.

Smoothing Dull Areas

- To tackle any dull areas, grab a clean washcloth and put a quarter-sized amount of metal polish on it.

- Utilize circular motions to gently rub the polish over the scratched or dull parts of the shower pan. Keep polishing the acrylic surface with the metal polish until the dull areas transform into a shiny finish.

Stain Removal

- Mix one cup of water and one cup of vinegar together, then add two tablespoons of baking soda. Transfer the solution into a spray bottle and adjust the concentration by adding additional water if needed. Spray the affected area and let the solution sit for five to seven minutes.

- For stubborn stains, directly apply a tablespoon of baking soda onto the stain and use a soft-bristled brush or disposable toothbrush to scrub it away. After cleaning the entire shower base, rinse it thoroughly with water.

5. Warranty

LIMITED WARRANTY EXCLUSION

ALL OTHER WARRANTIES EXPRESS OR IMPLIED INCLUDING ALL IMPLIED WARRANTIES OF MERCHANTABILITY OF FITNESS FOR A PARTICULAR PURPOSE ARE HEREBY DISCLAIMED. STREAMLINE® IS NOT LIABLE FOR ANY INDIRECT, PUNITIVE, INCIDENTAL, CONSEQUENTIAL, SPECIAL OR SIMILAR DAMAGES INCLUDING, BUT NOT LIMITED TO, TIME AWAY FROM WORK, HOTELS AND/OR RESTAURANT MEALS, REMODELLING EXPENSES IN EXCESS OF DIRECT DAMAGES WHICH ARE DEFINITIVELY CAUSED EXCLUSIVELY BY STREAMLINE®, LOST PROFITS OR REVENUE, INABILITY TO USE THE PRODUCT, OR ANY OTHER ASSOCIATED EQUIPMENT, THE COST OF SUBSTITUTE EQUIPMENT, AND ANY CLAIMS BY THIRD PARTIES RESULTING FROM THE USE OF THIS PRODUCT.

UNDER NO CIRCUMSTANCES SHALL STREAMLINE'S LIABILITY EXCEED THE PURCHASE PRICE OF THE UNIT.

STREAMLINE® PRODUCTS MUST BE INSTALLED BY A FULLY INSURED, LICENSED, PROFESSIONAL WHO SHALL FOLLOW THE INSTRUCTIONS PROVIDED BY STREAMLINE®. SHOULD THE PRODUCT BE INSTALLED BY AN INDIVIDUAL WHO IS NOT A FULLY INSURED, LICENSED PROFESSIONAL, THIS SHALL VOID THE WARRANTY OF THE PRODUCT.

SHOULD A WARRANTY CLAIM ARISE AND EITHER PARTS, REPLACEMENT, OR REPAIR OF THE STREAMLINE PRODUCT IS NECESSARY, FULFILLING THE INITIAL WARRANTY CLAIM SHALL DISCHARGE STREAMLINE® OF ANY FUTURE WARRANTY OBLIGATION. IF THE PURCHASER REFUSES THE WARRANTY SOLUTION PROVIDED BY STREAMLINE®, THIS ACT SHALL VOID THE WARRANTY. UNDER BOTH INSTANCES, STREAMLINE® WILL NOT BE HELD RESPONSIBLE FOR ANY COSTS ASSOCIATED WITH SERVICING THE WARRANTY

NO PERSON MAY MAKE ANY REPRESENTATION, AFFIRMATION, OR WARRANTY OTHER THAN THOSE CONTAINED IN THIS WARRANTY. ANY AFFIRMATION, REPRESENTATION OR WARRANTY BY ANY PERSON WHO IS NOT A STREAMLINE® EMPLOYEE SHALL NOT BE ENFORCEABLE AGAINST STREAMLINE®

Streamline® makes no representations about the quality, durability, or need for service or repair of its products other than the representations contained in this warranty. If you want a longer or more comprehensive warranty than the limited warranty that comes with this product, you should ask Streamline® or your retailer about buying an extended warranty. This warranty gives you specific legal rights, and you may have other rights that vary from state to state. Some states do not allow the exclusion or limitation of incidental or consequential damages, and some states do not allow limitations on how long an implied warranty lasts, so the limitations or exclusions stated above may not apply and may vary from state to state.

The warranties stated herein apply only to the first purchaser of the Product and are not transferable. Streamline® reserves the right to request proof of purchase at the time any warranty claim is submitted to confirm that the Product falls within the scope of this limited product warranty.

OUT OF WARRANTY PRODUCT

STREAMLINE® IS UNDER NO OBLIGATION, AT LAW OR OTHERWISE, TO PROVIDE YOU WITH ANY CONCESSIONS, INCLUDING REPAIRS, PRORATES,

LIMITED MANUFACTURER'S WARRANTY

All parts and finishes of Streamline® products are warranted to the original consumer purchaser to be free from defects in material and workmanship for a period of two to five years [depending on the product and model; please check the product listing or email us at support@streamlinebath.com if you are unsure] after the date of original retail purchase. Proof of the original purchase is required to obtain a remedy under this limited warranty. Streamline® recommends using a certified professional for all installation and repair of kitchen and bathroom fixtures.

Streamline® will replace, free of charge, during the warranty period any part or finish that proves defective in material and/or workmanship under normal installation, use and service. Replacement parts may be obtained by emailing us at support@streamlinebath.com

This warranty is extensive in that it covers replacement of all defective parts and even finish, but these are the only two things that are covered. Labor charges and/or damage incurred in installation, repair, or replacement as well as any other kind of loss or damages are excluded. Proof of purchase (original sales receipt) from the original consumer purchaser must be made available to Streamline® for all warranty claims. This is the exclusive warranty by Streamline®, which does not make any other warranty of any kind, including the implied warranty of merchantability. This warranty excludes all industrial, commercial and business usage, whose purchasers are hereby extended a one-year limited warranty from the date of purchase, with all other terms of this warranty applying except the duration of the warranty.

Streamline

WHAT IS NOT COVERED UNDER THIS LIMITED WARRANTY

- Normal wear and tear, spills of food, liquid, grease accumulations or cosmetic damage.
- Damage due to accidents, misuse, physical force, improper installation or operation, mishandling, neglect, fire, heat, water, humidity, liquids, insect infestation, or other intrusion.
- Products that have been repaired, altered or modified by anyone other than Streamline® or its authorized service representative.
- Damage caused by use of non-Streamline® accessories or misapplication.
- Products whose serial numbers have been removed, altered or rendered illegible.
- Products purchased, shipped from, used or serviced outside the United States, Canada, and Mexico.
- Damage caused by acts of nature such as, but not limited to, lightning damage.
- Products returned without valid proof of purchase.
- Consumable parts such as light bulbs, metal, and charcoal filters.
- Any party's willful misconduct, negligence, misuse, abuse, accidents, neglect, improper operation, failure to maintain, improper or negligent installation, tampering, failure to follow operating instructions, mishandling, unauthorized service (including self-performed "fixing" or exploration of the product's internal workings).
- Use of corrosive or abrasive cleaning products.
- Cosmetic damages including scratches, dents, chips and other damage, unless such damage results from defects in materials and workmanship and is reported to Streamline within 3 calendar days of delivery.
- Use of the Product in anything other than its normal, customary and intended manner.
- A failure to comply with any applicable state, local, city or county electrical, plumbing and/or building codes, regulations, or laws, including failure to install the product in strict conformity with local fire and building codes and regulations.
- In no event shall Streamline have any liability or responsibility whatsoever for damage to surrounding property, including cabinetry, floors, ceilings, and other structures or objects around the product.

NO ATTEMPT TO ALTER, MODIFY, OR AMEND THIS WARRANTY SHALL BE EFFECTIVE UNLESS AUTHORIZED IN WRITING BY AN OFFICER OF STREAMLINE.