S2017
ASSEMBLY & INSTALLATION GUIDE

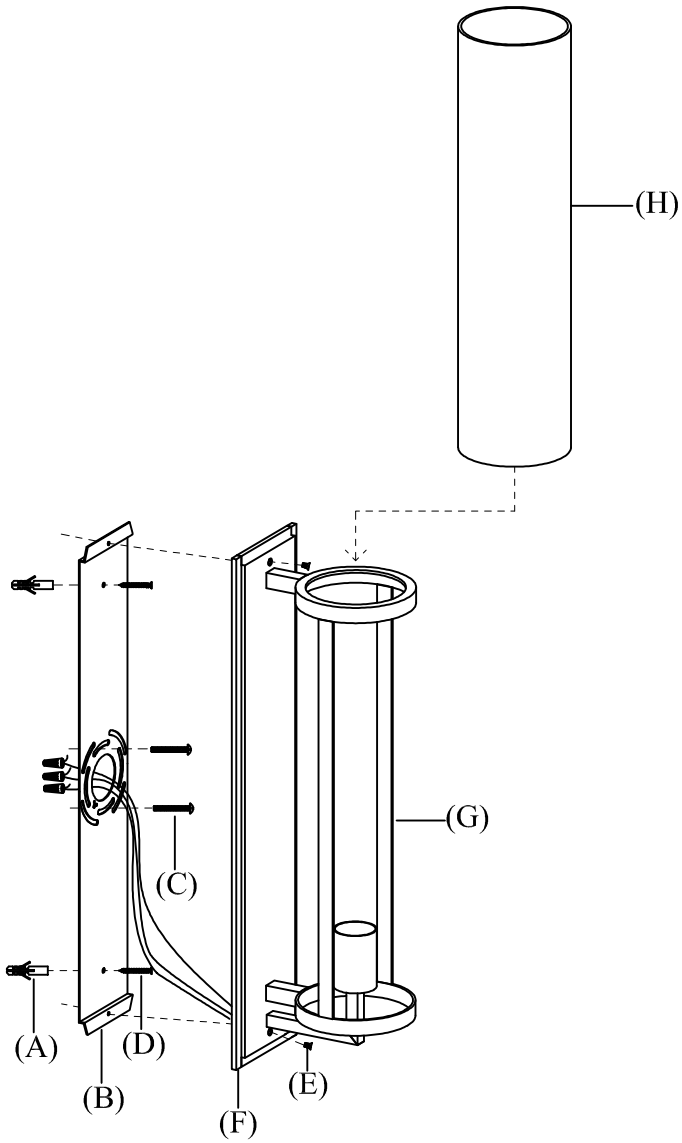

WE RECOMMEND INSTALLATION OF THIS LIGHTING FIXTURE BE DONE BY A LICENSED ELECTRICIAN.

WARNING * SWITCH OFF THE MAIN ELECTRICAL SUPPLY FROM THE MAIN FUSE BOX/CIRCUIT BREAKER BEFORE INSTALLATION.**

INSPECT ITEM CAREFULLY BEFORE ATTEMPTING TO INSTALL. IF THERE IS ANY DAMAGE OR OBVIOUS DEFECT, DO NOT INSTALL.

ITEM MAY NOT BE RETURNED ONCE IT HAS BEEN INSTALLED.

---

1. Remove mounting plate (B) from fixture base (F) by removing base screws (E).
2. Place mounting plate (B) on the wall outlet box, use it as a template, mark two points for both mounting holes of mounting plate (B). Remove mounting plate (B).
3. Drill small holes on the marked points, the holes should be big enough to accommodate with plastic anchors (A).
4. Push plastic anchors (A) into the holes. Gently pull the wires from the wall outlet and allow the wires to hang. Thread the wires through the center hole in mounting plate (B).
5. Attach mounting plate (B) to wall outlet box by aligning the holes, inserting mounting screws (C) to the holes of wall outlet box and inserting screws (D) to secure mounting screws (C)to the wall.
6. Attach ground (green) wire to ground wire from wall outlet box (usually green or copper in color), fasten together with a plastic wire connector. Tightly wrap the wire connector with electrical tape so the end of the connector is sealed. IT IS IMPERATIVE THAT THE OUTLET BOX IN YOUR HOME BE PROPERLY GROUNDED.
7. Connect neutral (white) fixture wire coming from fixture base to neutral (usually white) outlet wire. Fasten both wires together with a plastic wire connector and tightly wrap the wire connector with electrical tape.
8. Repeat the procedure with the hot (black) wires. Always make sure that no wire strands are left outside the connectors. DO NOT REVERSE THE HOT AND NEUTRAL CONNECTIONS OR SAFETY WILL BE COMPROMISED. Gently push the fixture base (F) onto the affixed mounting plate (A) and tighten with base screws (E). Insert light bulb into socket.
9. Insert glass shade (H) into shade holder (G).