KB2791,8KL
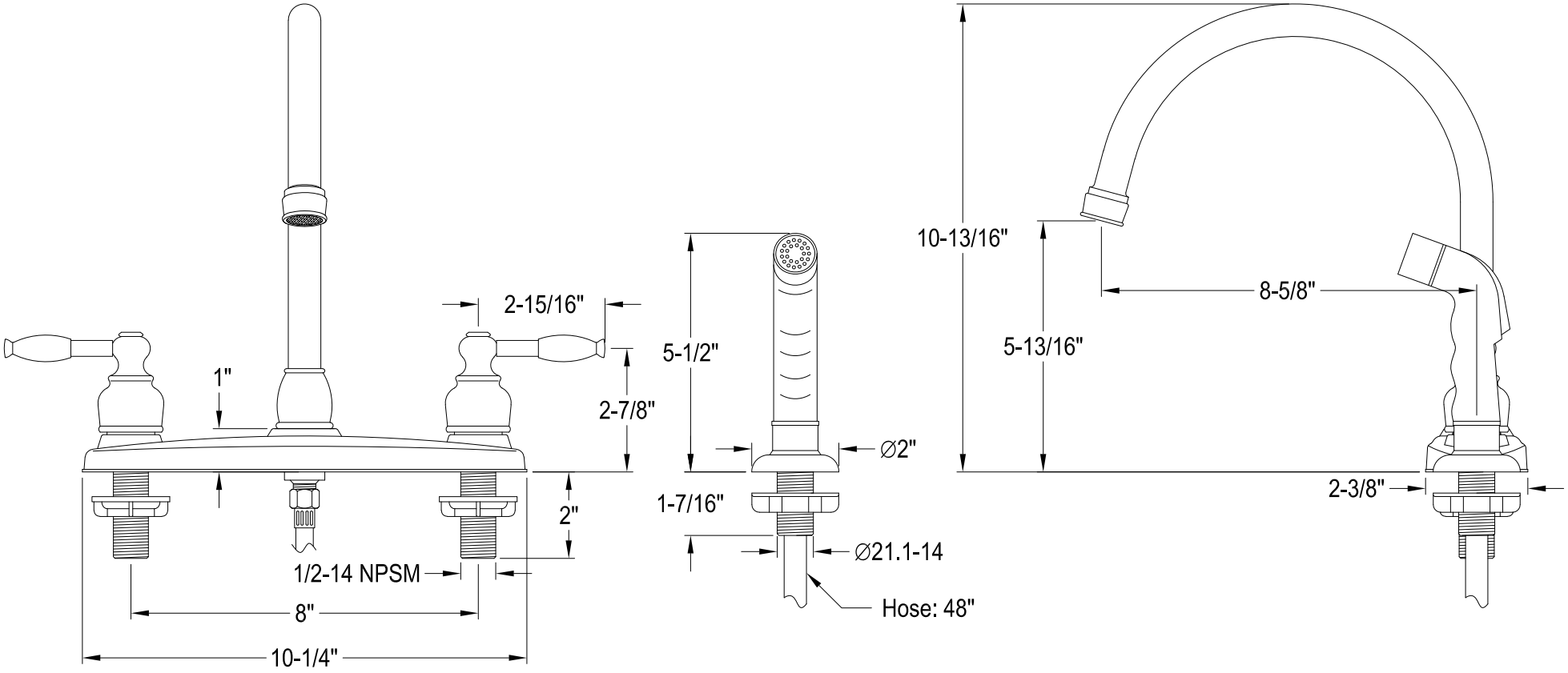
Twin Handle 8" Centerset Kitchen Faucet With Sprayer