PIONEER FAUCETS
STYLE THAT WORKS

4DM610T
Del Mar SERIES

Two Handle Roman Tub Trim Set

- Metal Lever Handles
- Rigid C Style Spout
- 7-1/2" Reach
- 3-Hole 8" to 16" Installation
- For Use with 4300B Valve - Valve not included

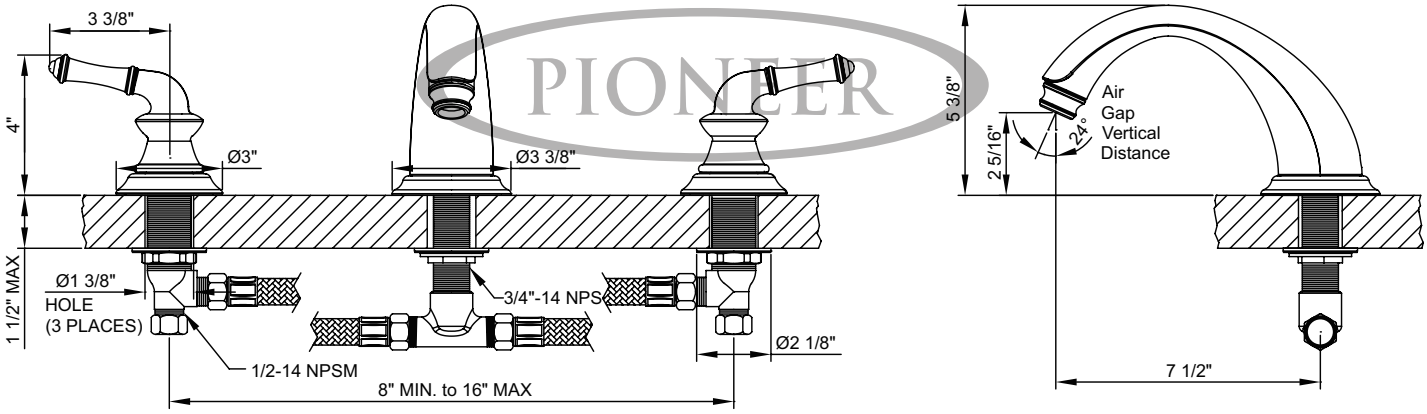

PIONEER