ALTAIR
FASHION BATHROOM LIFE

INSTALLATIONS SPECIFICATION

SKU	53060-BAT-MW
Overall Dimensions	59.1"Wx30.7"Dx22.0"H
Inner Dimensions	45.3"Wx19.7"Dx17.1"H
Bathtub Color Finish	White
Water Capacity (to overflow)	90 gallons
Water Depth (to top)	17.1 inch
Water Depth (to overflow)	14.4 inch
Seating Capacity	1 person
Tub Weight	244.7 lbs.
Overflow Height	0.3 inch
Faucet Congurations	No Faucet Drilling
With pop-up drain	Pop-up drain included
Drain & Overflow Color Finish	Matte White

All measurements are approximate.Measurements may vary +/1/2".

Giotto

59.1"x30.7"

Solid Surface Bathtub

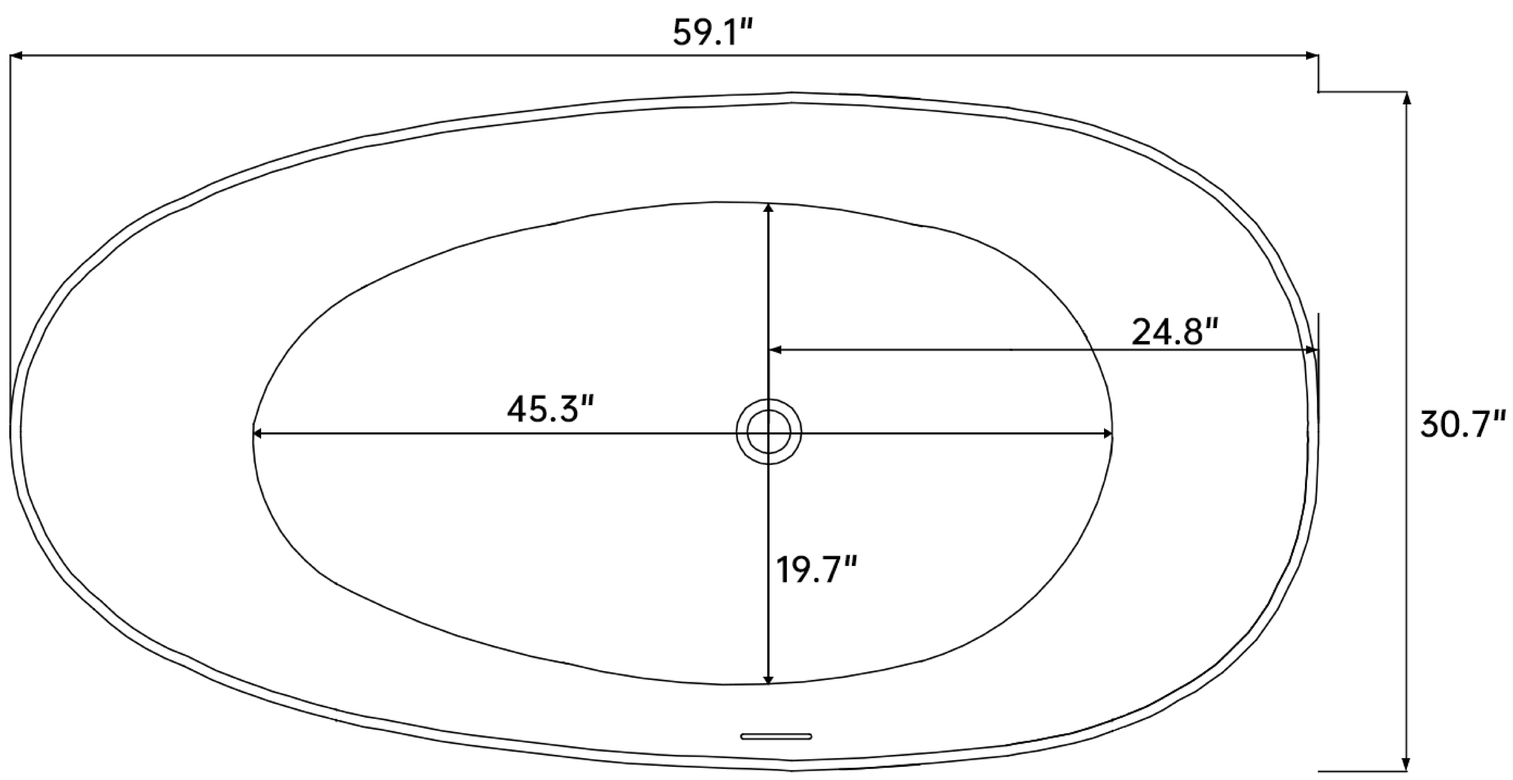

vertical view

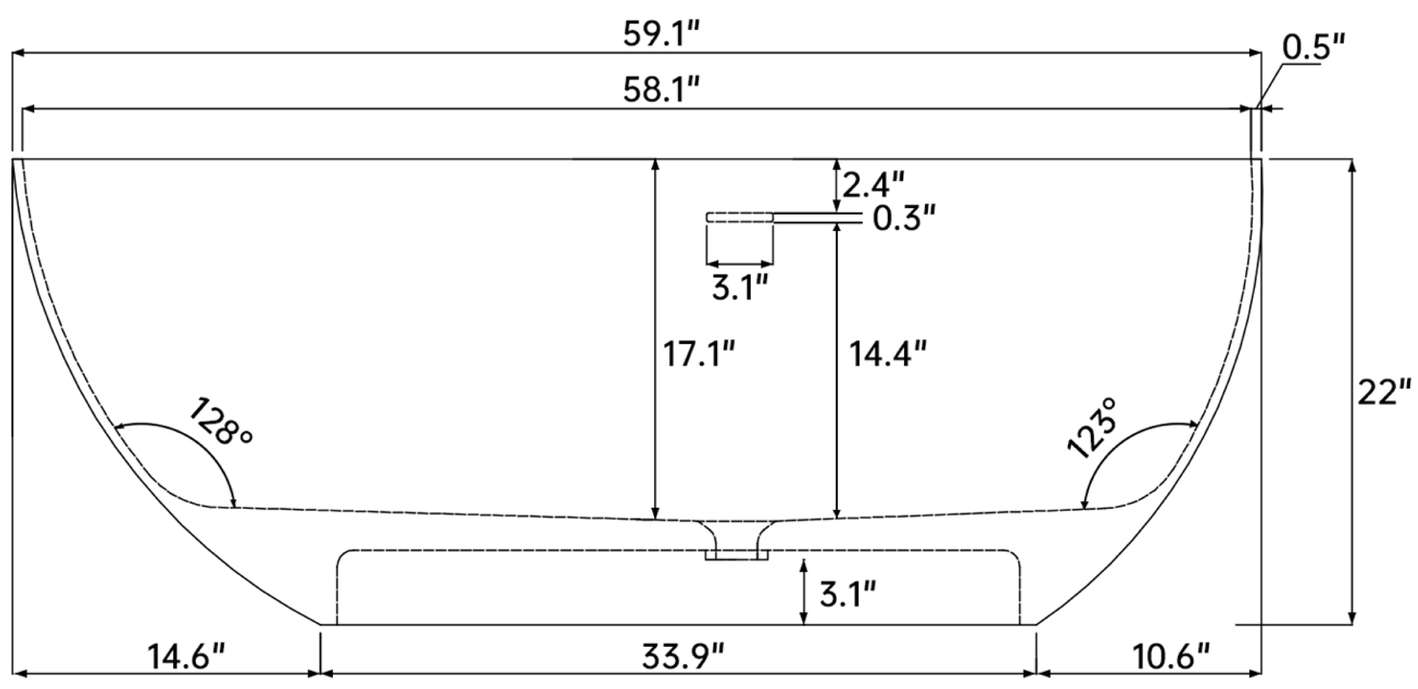

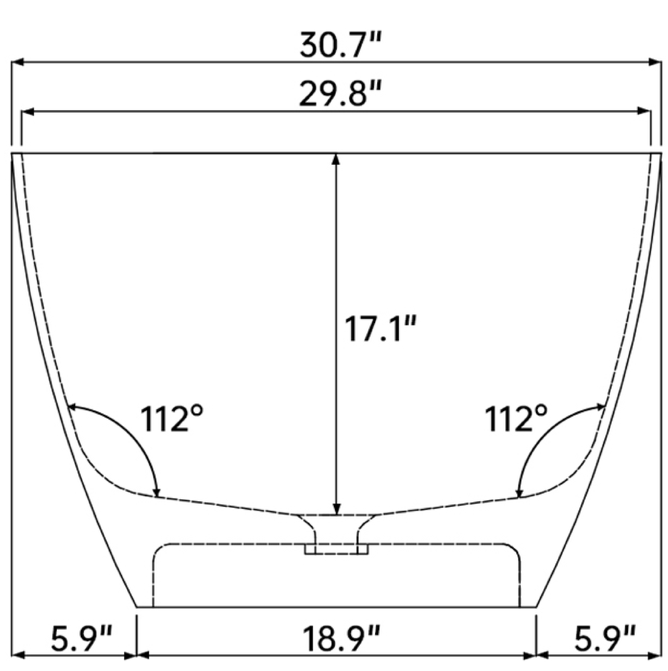

www.altairdesignusa.com

ALTAIR