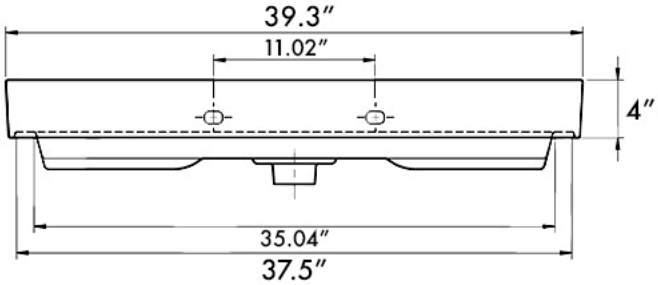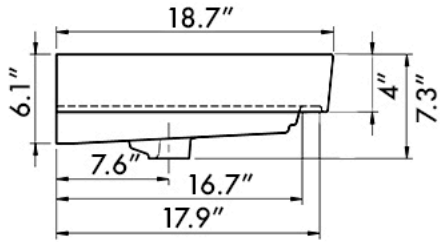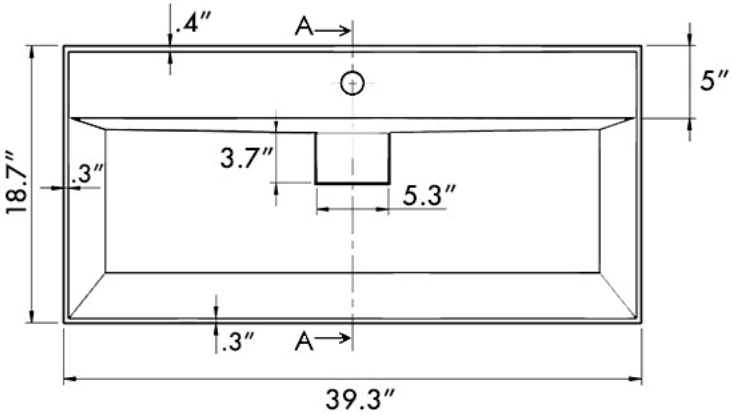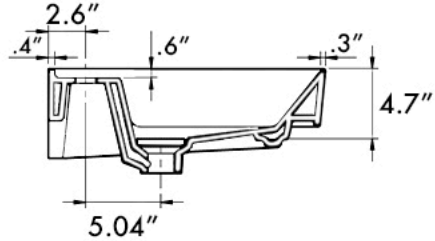CeraStyle 037500-U