CC552T1,CC551T2,5,8
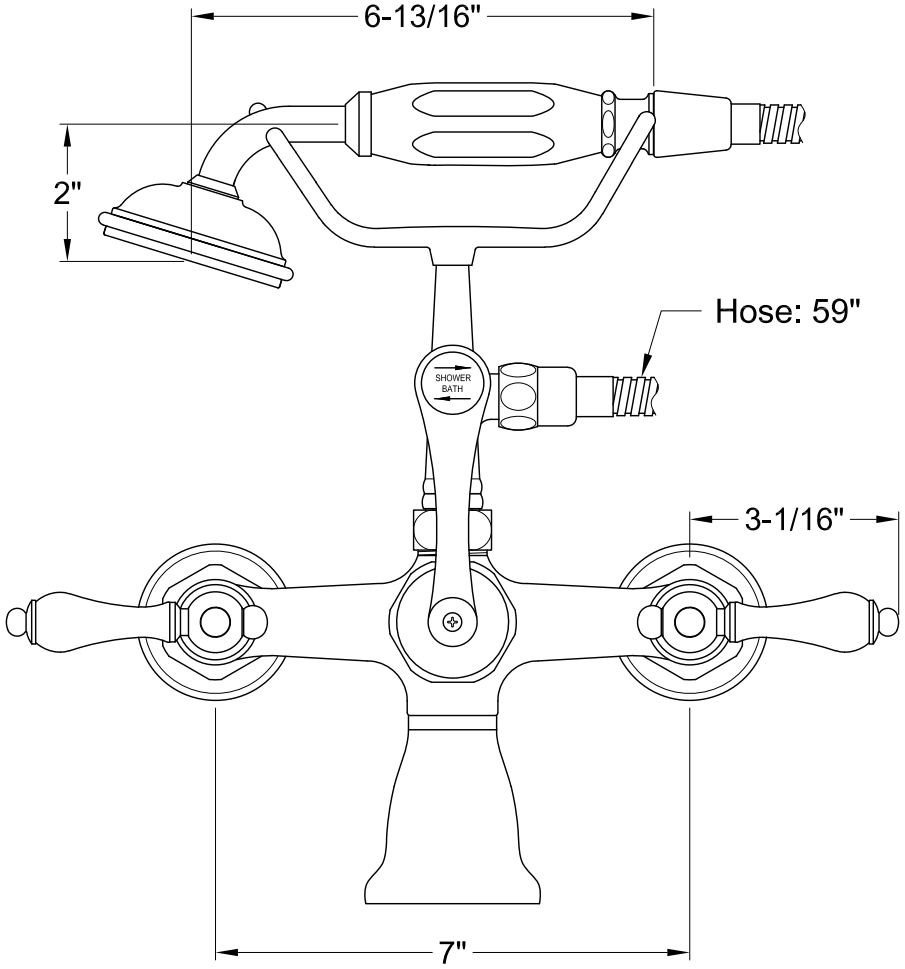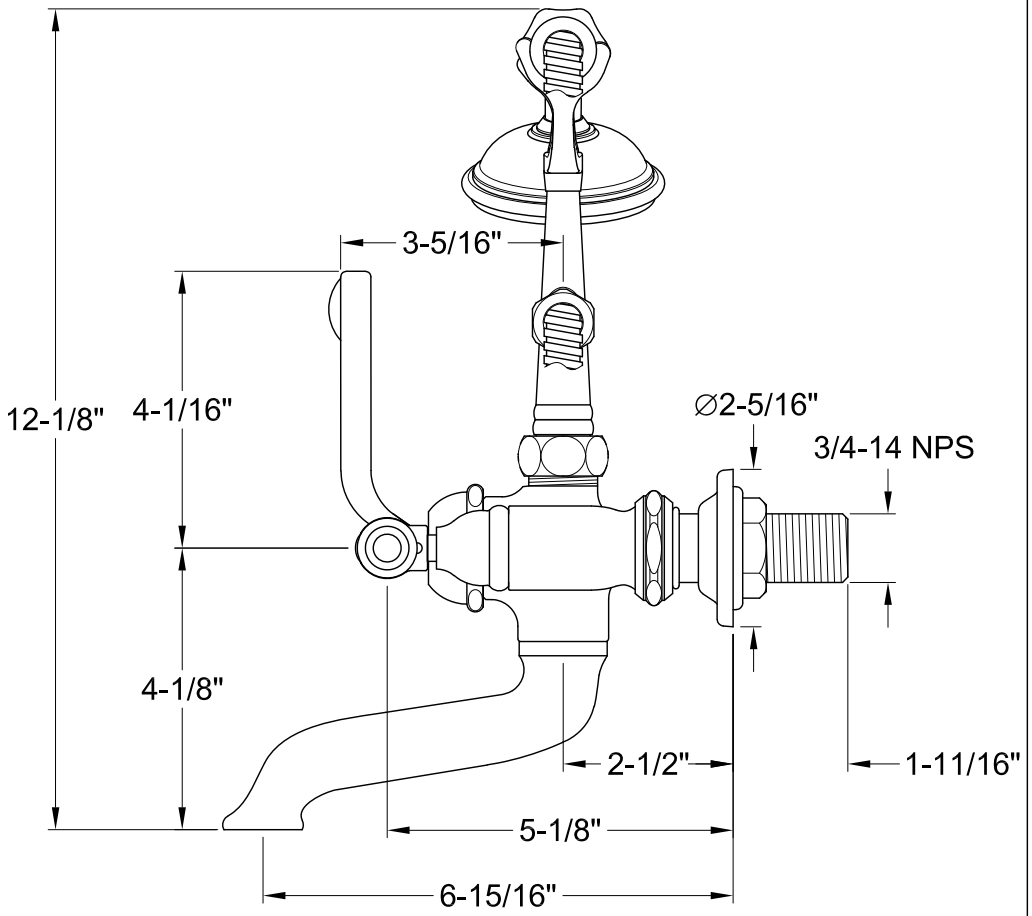
Wall Mount Tub Filler With Hand Shower