KS3020,1,2,3,5,6,7,8PX
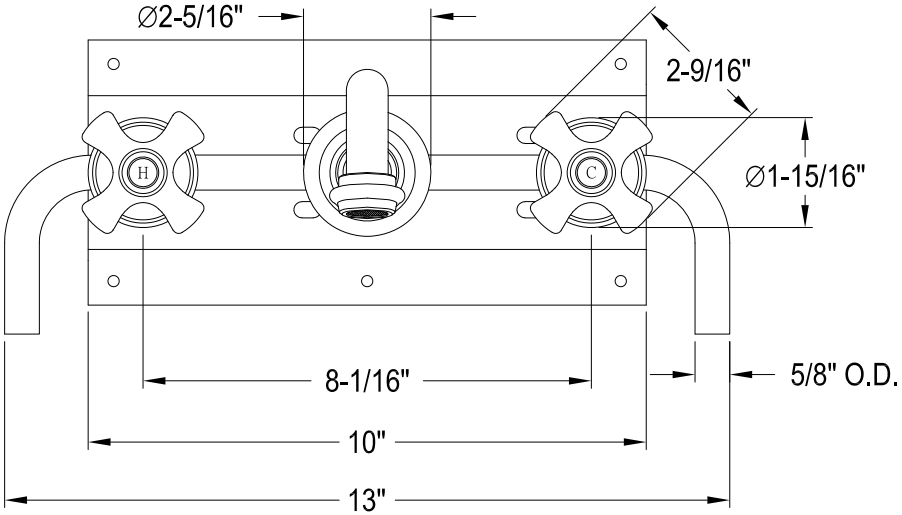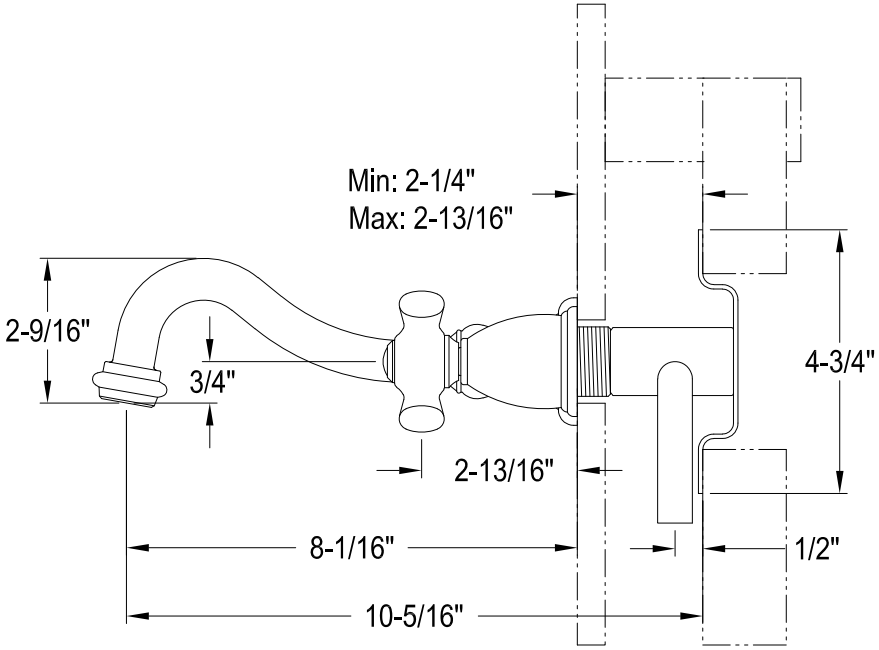
Twin Handles Wall Mount Roman Tub Filler