INDIVIDUAL PARTS	
DF-6	Handle flange
DF-10	Handle screw
DF-25	O-ring
T-1	Hot renewable seat
T-2	Cold seat O-ring
T-3	Cold renewable seat
T-5	Hot washer screw
T-6	Hot washer
T-7	Cold washer retainer
T-8	Cold washer
TA-10	Flow control spindle
T-11	Cap gasket
T-12A	Cap assembly
T-16	Packing, O-ring and washers
T-17	Packing nut
T-19/20	Dome cover and lock nut
T-21C	Diverter retainer
T-23A	Diverter spindle (Model A) (beige or gray)
T-23B	Diverter spindle (Model B) (black)
T-24	Spindle O-ring
T-26	Plaster shield
T-32	Handle screw with lock washer
T-33	Plug button
T-34	Limit stop with O-ring
T-35A	Hot seat removal tool
T-35B	Cold seat removal tool

INDIVIDUAL PARTS	
T-52A	Stop spindle assembly/ escutcheon screw retainer
T-55B	Stop plaster shield
T-55C	Stop plaster shield removal tool
T-130A	Dial (Model A)
T-130B	Dial (Model B)
T-131	Escutcheon (Model A/B)
T-132	Dial (Model C)
T-133	Escutcheon (Model C)
T-139	Diverter handle
T3-28	Escutcheon screw
T3-31 INS	Handle insert
T-52	Stop spindle assembly/ escutcheon screw retainer (T-52A) Stop plaster shield (T-55B)

COMPOSITE PARTS	
DF-28-LAM	Metal finish insert handle
DF-28-LCF	Cleaf faceted insert handle
DF-28-LPO	White insert handle
DF-28-LWF	White faceted insert handle (Above insert handles include handle screw (DF-10), Handle flange (DF-6), O-ring (DF-25)
DF-28-LHM	Handle body (T-216) Handle (T-218) Handle screw (T-219)

COMPOSITE PARTS	
	Plug button (LN-223) O-Ring (CF-6A) Handle Screw (T-32)
TA-4	Hot seat (T-1) Cold seat (T-3) Cold seat O-ring (T-2)
TA-9	Hot washer screw (T-5) Hot washer (T-6) Cold washer retainer (T-7) Cold washer (T-8) Cap gasket (T-11)
TA-10	Spindle assembly
TA-25A	Diverter/volume spindle (T-23A) O-ring (T-24) for Model A tub/shower valve (beige or gray)
TA-25B	Volume spindle (T-23B) O-ring (T-24) for Model B shower valve (black)
T3-31L	Loop style lever handle: Insert (T3-31 INS) Handle screw (T-32) Plug button (T-33)
T3-31S	Solid style lever handle: Insert (T3-31 INS) Handle screw (T-32) Plug button (T-33)

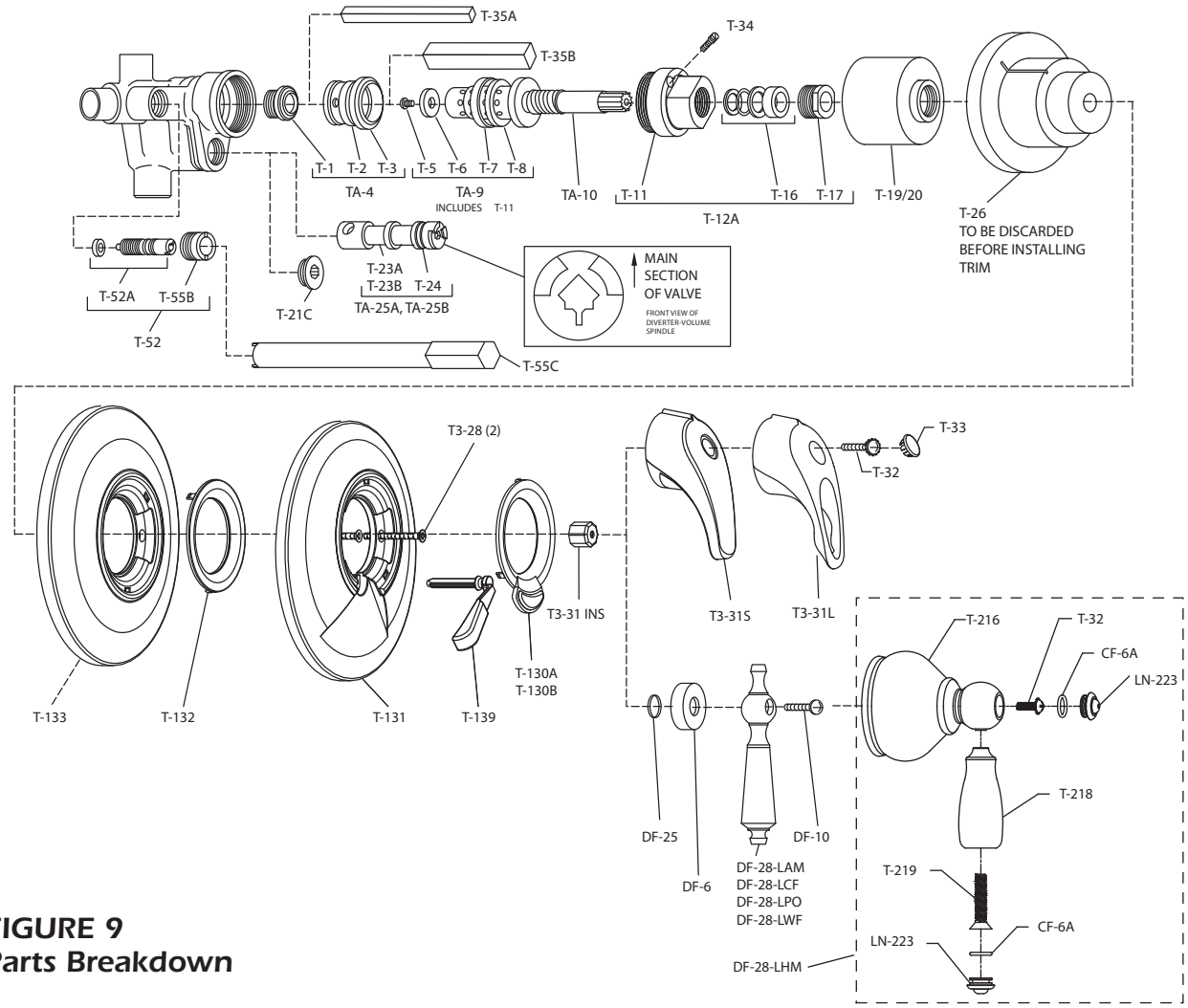

FIGURE 9
Parts Breakdown