Cascade

Freestanding Vanity
SM-BV560WN

FEATURES:

- Sleek, freestanding design
- Glazed ceramic, single sink
- Standard 1 3/4" drain hole
- Standard 1 3/4" faucet hole
- Chrome-finish overflow
- Wooden legs

INSTALLATION:

Freestanding, assembly required

COLORS & FINISHES:

- Natural Oak: SM-BV560
- Black: SM-BV560B
- Brown Oak: SM-BV560WN

SPECIFICATIONS:

N.W: 55 lb.
W: 18 1/4" x D: 17" x H: 35 3/16"
Inner Sink: D: 10 5/8" x W: 13 3/8" x H: 5 1/2"
Basin Depth: 5 1/2"

INCLUDED PARTS:

- Cabinet: SM-BV560WN-C
- Sink: SM-BVP18S

REQUIRED PARTS:

- Sink Drain*
- Drain Trap*
- Faucet*
- Water Supply Lines
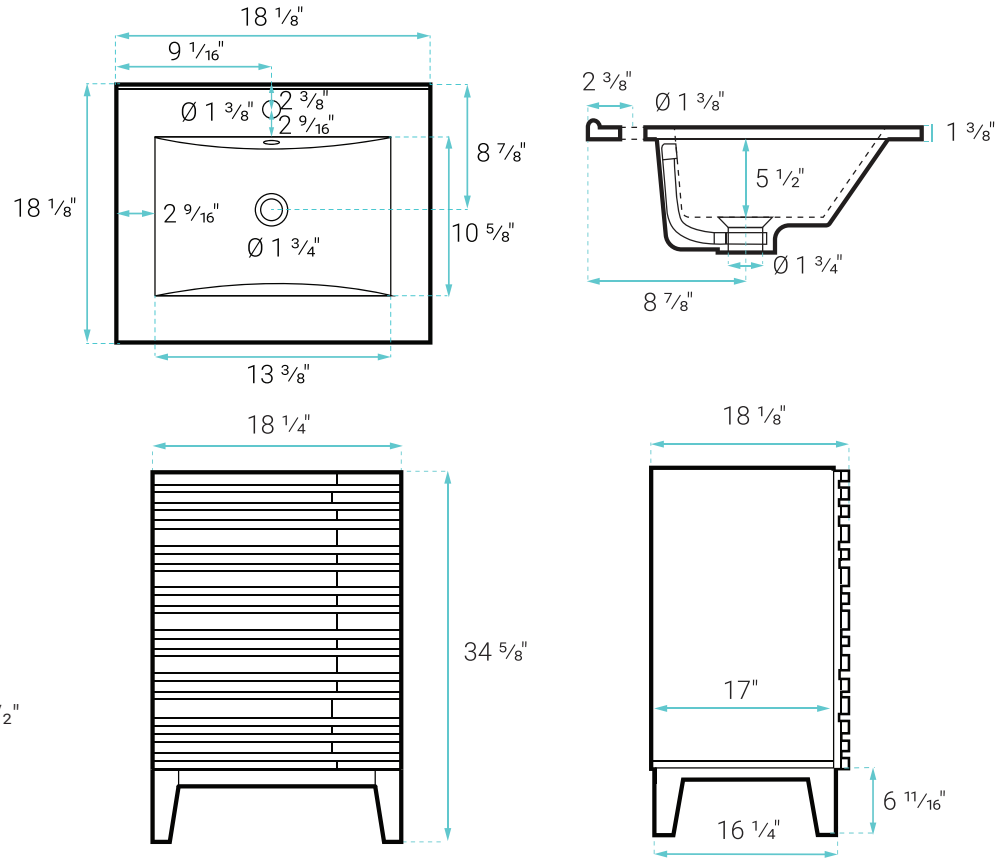
*Sold Seperately by Swiss Madison