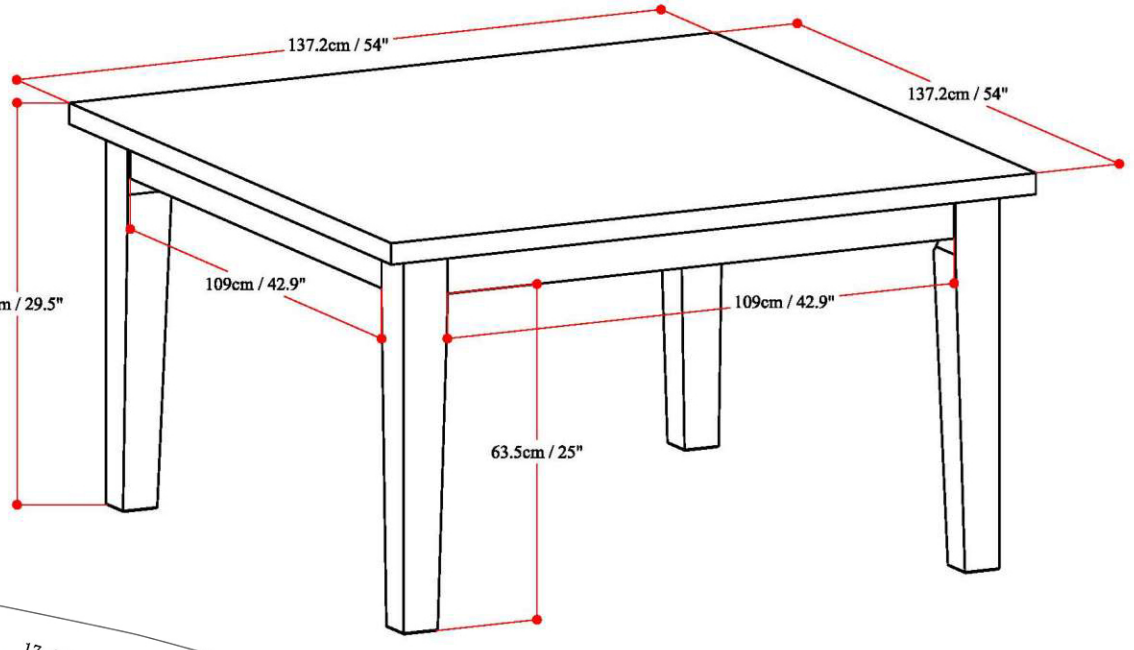

Net Weight : 120 (lb)

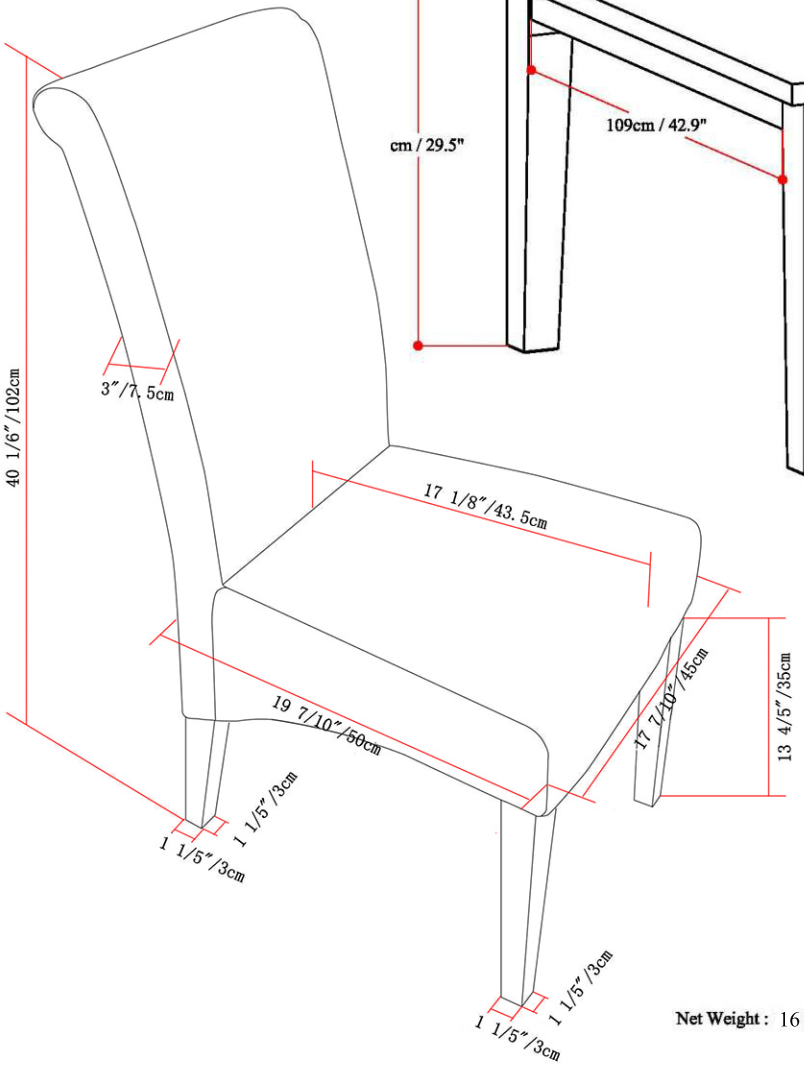

Net Weight : 16 (lb)