Product Specs Sheets

AXA

H10

82091_LAVABO DA PIANO CON PIANO RUBINETTERIA 50X43 CM
OVERTOP BASIN WITH TAP HOLE 50X43 CM

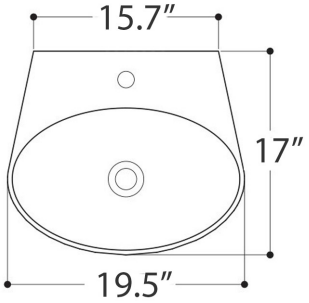

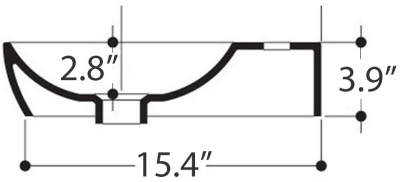

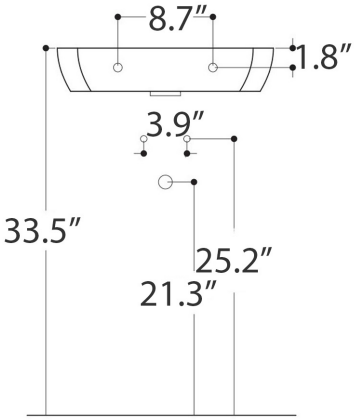

N.B.: Le misure indicate possono subire una variazione dello 0.8 % circa, dovuta ad usura stampi o a piccole variazioni delle caratteristiche tecniche relative alle materie prime che compongono l' impasto.

N.B.: Indicated size could have a variation of about 0,8 % due to the usure of the moulds or the small variations of the raw materials' technical characteristics used in the mixture.

Collection	Model	Dimensions Metric	
H10	H10 50W - 8209101	*1 inch = 2.54 cm* *1 inch = 25.4 mm*	WS® BATH COLLECTIONS 1051 Lea Drive - Collegeville, PA 19426 Tel. 215 513 9400 - Fax 610 831 0215 www.wsbathcollections.com - info@wsbathcollections.com

We recommend the following items that work with your sink.

TRAPS

Linea 53922
Our best seller

Linea 5392

Linea 53925

Linea 53921
Space saving

DRAINS

Linea 53995
Push waste drain (click clack)
without overflow

MOUNTING HARDWARE

Wall-mount installation

Bolts

Vessel/ countertop installation

Silicone *(optional)*

Collection	Model	Dimensions Metric	
H10	H10 50W - 8209101	*1 inch = 2.54 cm* *1 inch = 25.4 mm*	WS® BATH COLLECTIONS 1051 Lea Drive - Collegeville, PA 19426 Tel. 215 513 9400 - Fax 610 831 0215 www.wsbathcollections.com - info@wsbathcollections.com