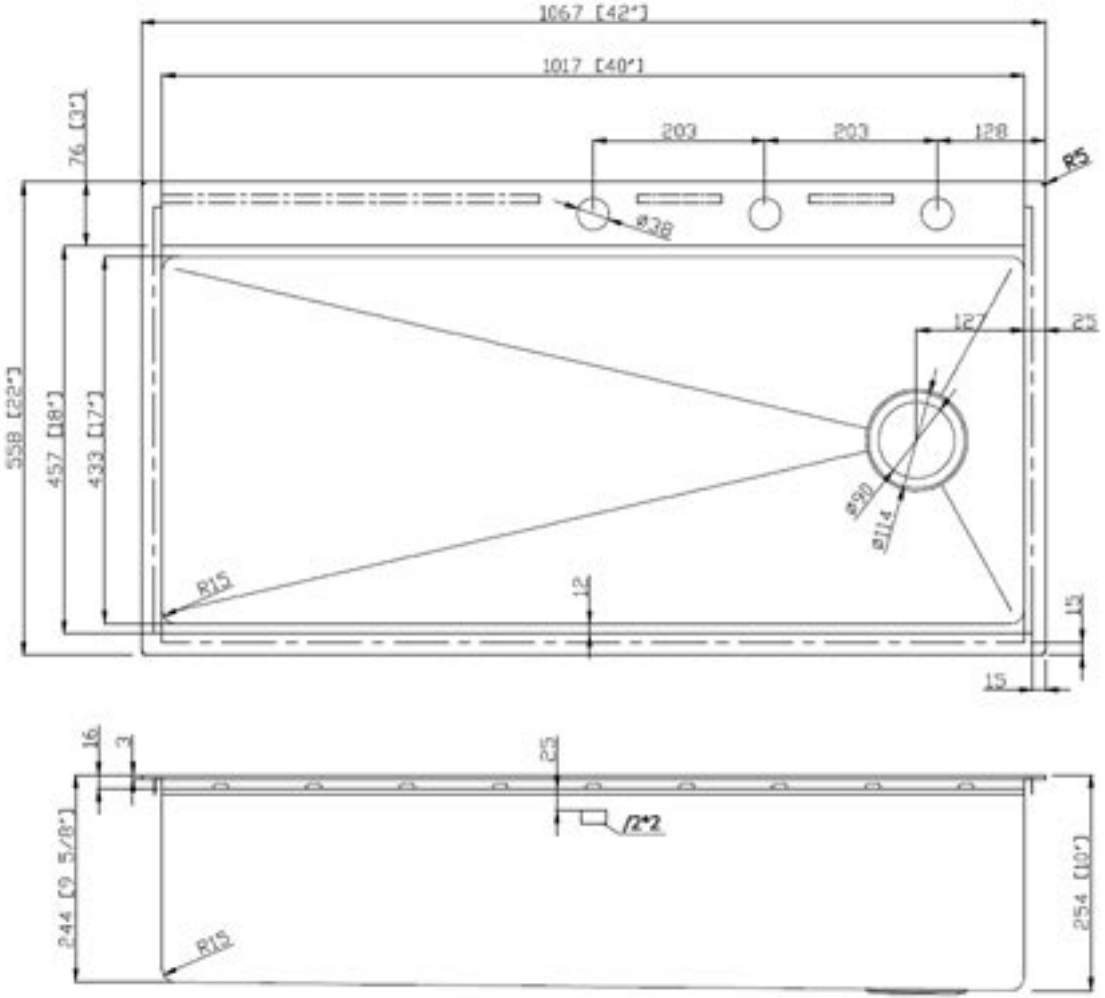
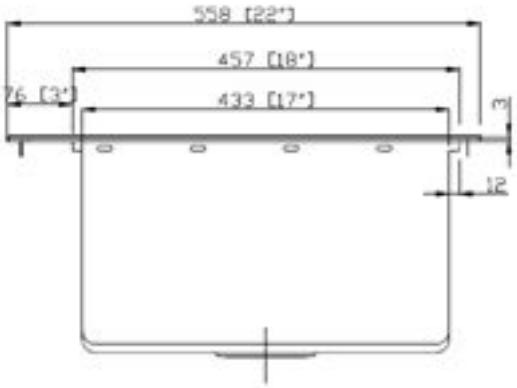
NO.:WSRT4222
WSRT4222-BLK