Installation Guide

Fine Fireclay Kitchen Sink

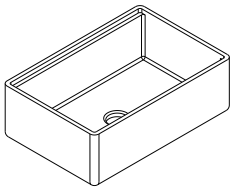

K2-SF30T

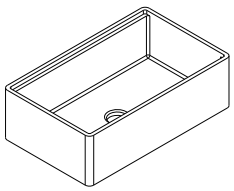

K2-SF33T

Fireclay Farmhouse Sink

Installation Instructions

Thanks for choosing KIBI products. You have chosen one of our impeccable Fireclay sinks, and we are excited to get you started on installing it.

READ ALL INSTRUCTIONS BEFORE UNPACKING THE PRODUCT

I. Important

1- Carefully read all installation and care instruction before proceeding.

2-Warning: Due to the dimensional variation inherent in the fireclay manufacturing process, sink cutout temperate are not provided. KIBI recommends using the actual sink for countertop cut. A custom counter top, sink base cabinet and support framing is required for proper installation. Fireclay sinks should only be installed with a solid surface countertop (i.e., granite, Corian® or Silestone®).

3-Farmhouse sink may require custom cabinetry. We recommend consulting an experienced cabinet maker for assistance. Providing the cabinet maker with the actual sink to be installed will ensure a custom fit.

4-Observe all state and local building codes, If you are not familiar with installation and plumbing, consult a professional.

5-Sinks are heavy, please arrange assistant to move or position, to avoid personal injury and surface damage.

6-Keep this booklet and the receipt (or other proof of date and place of purchase) for this product in a safe place. The receipt is necessary to request warranty parts.

7-KIBI does not accept any liability for damage to countertop, sink fixture, faucets or personal injury during installation. Warranty is void if installation guide is not followed.

8-Do not return to store if problems, Contact Customer Service ASAP at 855-883-0888 or email support@kibiusa.com to get help.

II. Tools you may need

1. Drill

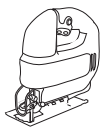
2. Jig Saw

3. Safety Glasses

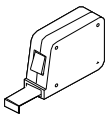
4. Tape Measure

5. Pencil

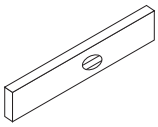
6. Level

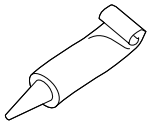
7. Silicone

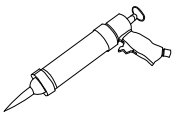
8. Silicone/Caulk Gun

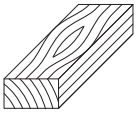
9. Wood Braces

10. Framing Square

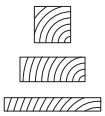
11. Suppot Frames

12. Shims, if necessary

III. Installation Options

We recommend under-mount sink installation, Flush-mount and built up installation are not recommended.
Ensure there is adequate room for the faucet and backsplash installations.

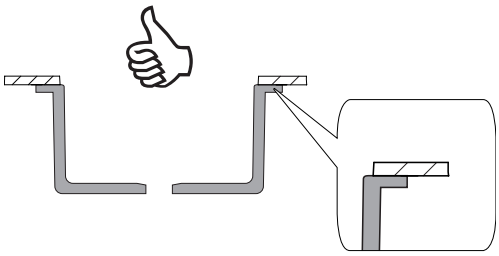

Positive Reveal

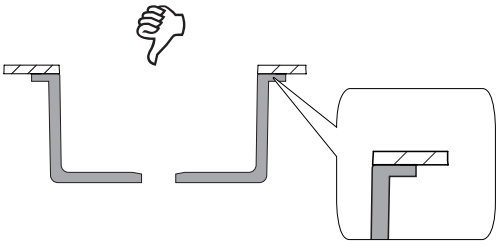

Flushed/Zero Reveal

IV. Fireclay Sink installation

Step 1: Base Cabinet preparation

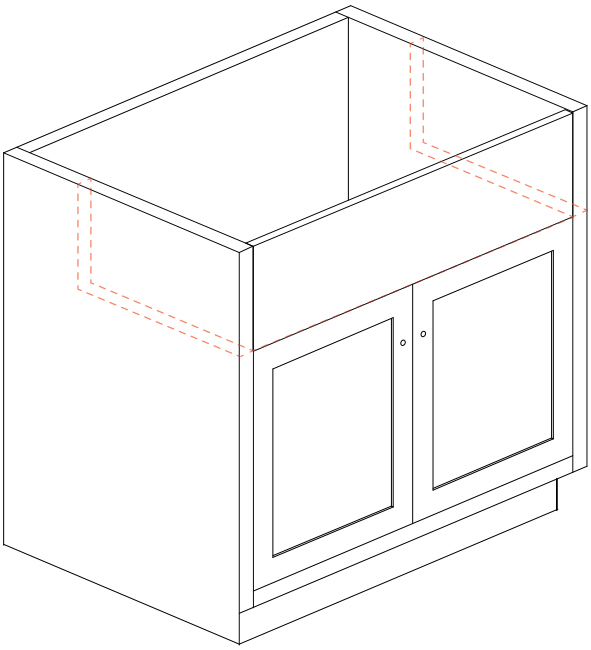

Measure the size of the sink, Including the front apron. Cut the face of the cabinet to allow the sink slide in.
Use painter's tape for marking and cutting purpose to protect the cabinet and sink from damage.
KIBI recommends to install the sink under the counter, If you want to install flush or semi-recessed, be sure to adjust the height and length of the cabinet cut.

⚠ **IMPORTANT: Due to the dimensional variation from the fireclay manufacturing process, KIBI Sinks does not offer the cutout temperate For fireclay sinks. It's essential that prior to installation, you discuss with your installer and agree on the final appearance. Cabinet should Not be cut or fabricated without the sink.**

Step 2: Countertop Preparation

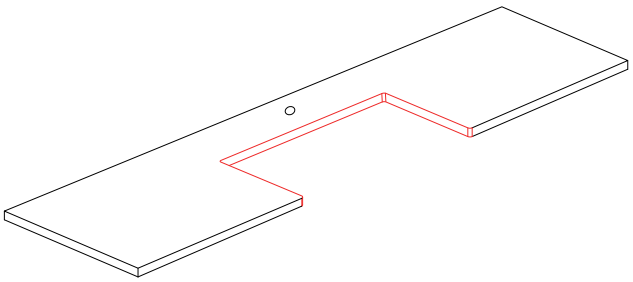

Measure the size of the sink, including the front apron. Cut the countertop to allow the sink slide in.

Step 3: Cabinet/Support frame Construction

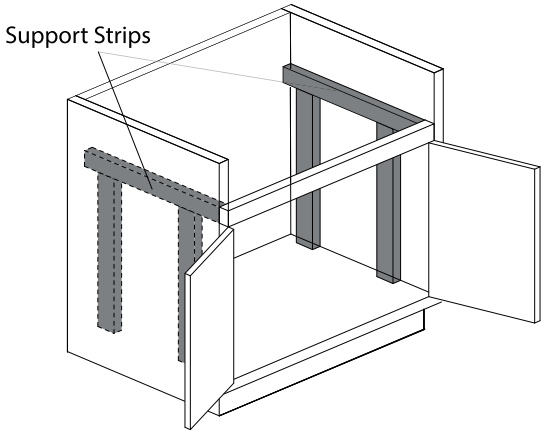

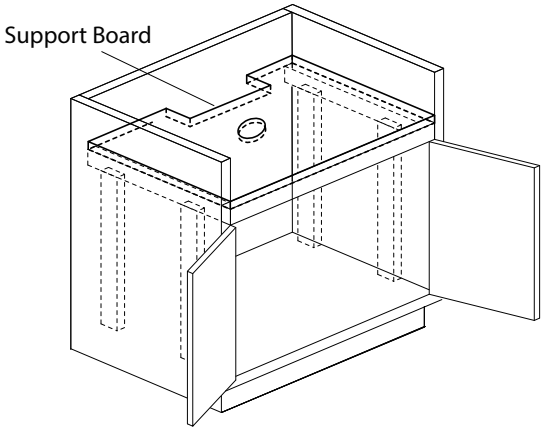

This step to ensure the bottom of the sink has enough support
Construct a wood support frame to fit inside the cabinet opening. Allow adequate clearance of the water supply lines and drainage system.
The recommended support frame design is shown in the illustration on the left, which consists of four vertical supporting strips, two horizontal supporting strips and one supporting board. Due to the variety of installations possible with this sink, your installer may suggest a different support frame design.

⚠ **IMPORTANT: Base cabinet and wood support frame are essential for proper installation. Base cabinet and support frame must sufficiently support the weight of the sink when full.**

Step 4: Sink installation

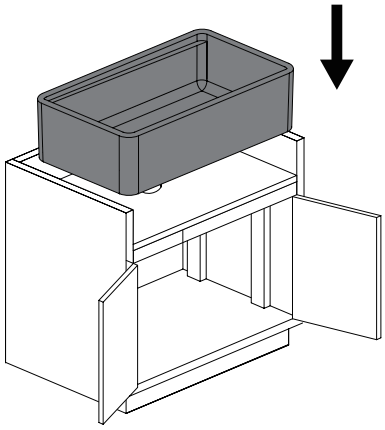

Using two people, carefully place the sink in place. Verify that the sink can fit in the cabinet opening and rest properly on the supporting system. Make a small adjustment to fit as necessary.
Verify the overall appearance and check for levelness to ensure correct drainage.

⚠ **Warning! To be avoid of risk of personal injury or product damage, Handle with care. The product can break, chip, cause injury or product damage.**

Step 5: Countertop Installation

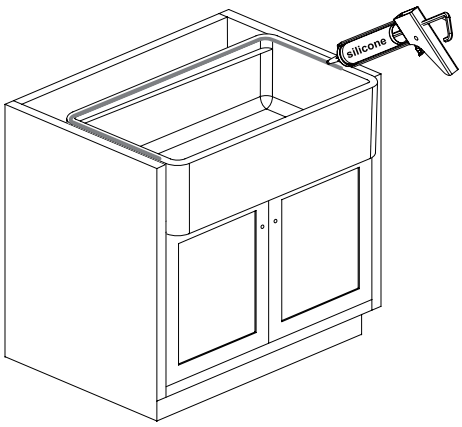

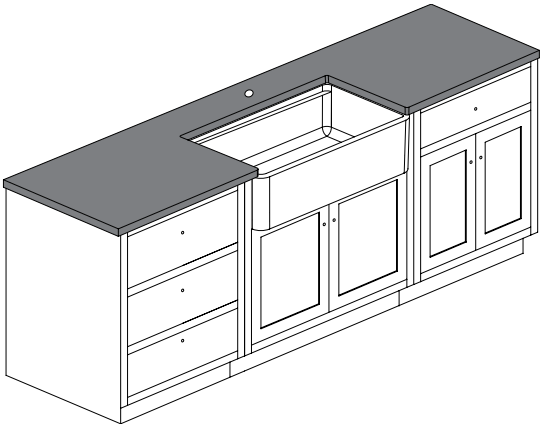

After cleaning, apply a bead of silicone sealant between the top flange (or lip) of the sink and the countertop to create a watertight seal. Clean excess silicone immediately. Verify the overall appearance and check for levelness to ensure correct drainage. Carefully place the countertop and verify that it is level.

⚠ **IMPORTANT: Apron front sinks from KIBI Sinks should only be fastened to a solid surface countertop.**

Step 6: Connect water supply and drainage system per manufacturer's instructions. Run water to test for leakage

V. Products Care and Maintenance

KIBI Fireclay sinks are made of clay fired at over 2,200°F and created for a lifetime of easy care. Just follow the simple guidelines listed below.

Routine Care

Most dirt & stains: Use soapy water or vinegar-based cleaner and a sponge and towel dry.
Water marks: Wipe with damp cloth and towel dry.
Difficult Stains: 50/50 water/bleach solution or non-abrasive cleaners. Follow cleaning manufacturer's instructions, rinse thoroughly and towel dry.

Preventing Damage:

Avoid exposing KIBI Fireclay to strong chemicals, such as paint removers, oven cleaners, etc. If contact occurs, quickly flush the surface with water. Do not use a straight or undiluted bleach solution.
Do not set hot pans directly into sinks
Run cold water when pouring boiling water into sinks.
Do not use any abrasive cleaning products, scouring pads or steel wool.
Do not use caustic solutions containing ammonia or alkalis.

VI. KIBI Limited Fireclay Sink Warranty

KIBI warrants to the original purchaser of an KIBI Fireclay sink that KIBI will, at its option, replace or repair, without charge, such product if it fails due to a manufacturing defect for a period of 1 year of normal residential use. Product replacement does not include transportation cost or labor installation cost. This warranty covers only Fireclay under-mount sinks installed in a conventional solid surface countertop and applies to residential installations only. KIBI reserves the right to examine product in question and its installation prior to replacement.

WASTE FITTINGS AND ACCESSORIES ARE NOT WARRANTED OTHER WARRANTY CONDITIONS ON SINKS

This warranty does not cover product failure or damage caused by the use of optional KIBI accessories, abusive treatment, misuse, environmental factors, normal wear including surface dulling and scratches, improper care and cleaning, use of aggressive and abrasive cleaners, damage due to handling or failure to follow the recommended procedures for installation, care and maintenance as detailed in the installation and care guide provided with every sink. This warranty is extended only to the original consumer purchaser of the product. This warranty does not cover shipping costs, labor costs, or any other charges for such items as installation or replacement of the sink, diagnosis or replacement of any faucet or component part, or any other expense or loss.

All incidental or consequential damages are specifically excluded. No additional warranties, express or implied are given, including but not limited to, any implied warranty of merchantability or fitness for a particular purpose.

Some states do not allow the exclusion or limitation of incidental or consequential damages or limitations on how long an implied warranty lasts, so the above limitations or exclusions may not apply to you.
This warranty gives you specific legal rights, and you may also have other rights which vary from state to state.

Kibi®
LIVE SIMPLY