KTK100MB,1,2,3,5,6,7,8P
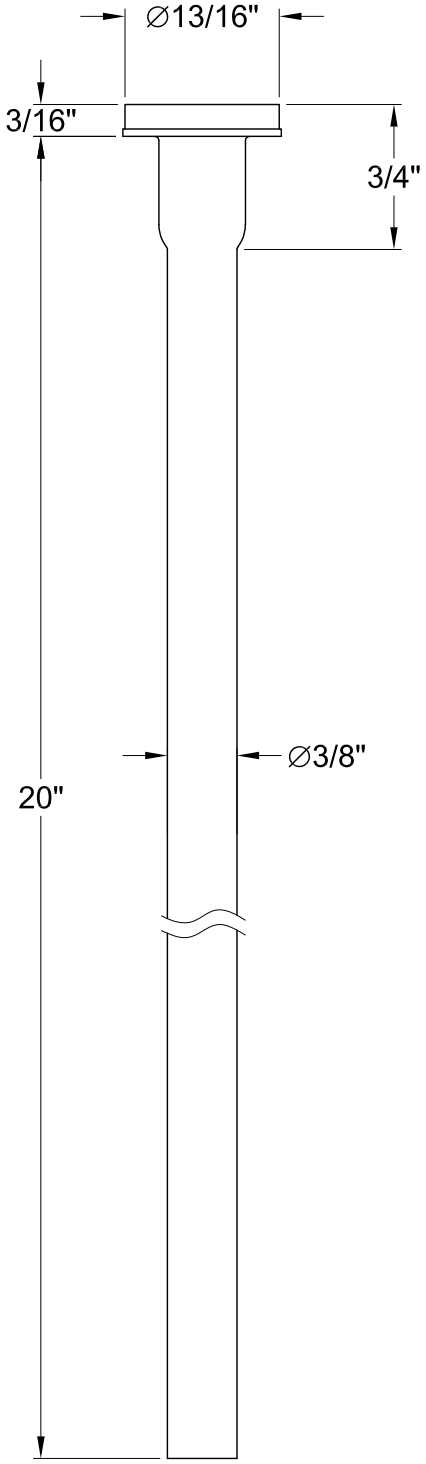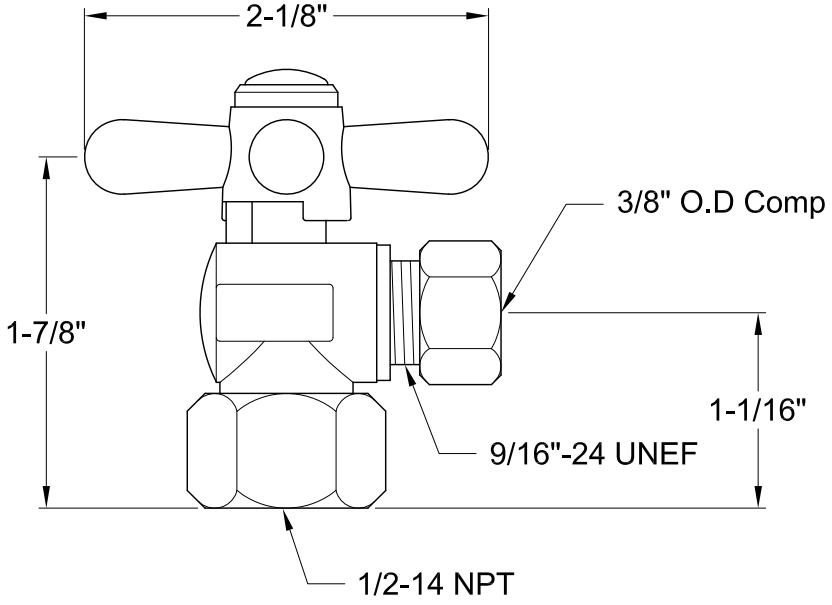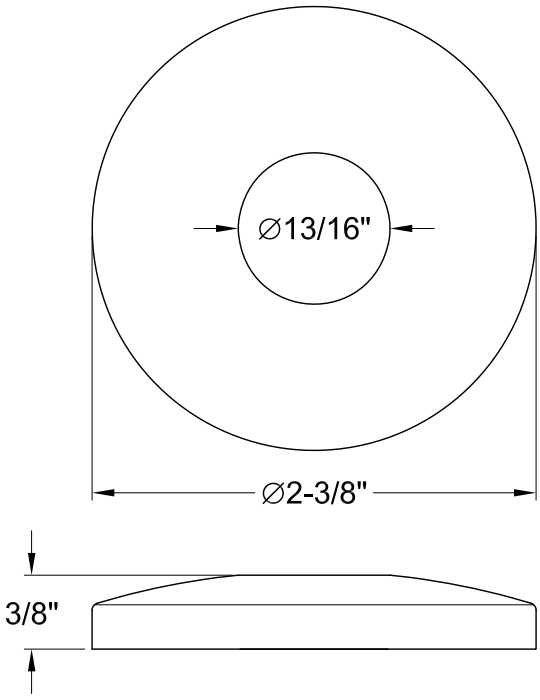
Plumbing Supply Combo