# 3 1/2” W X 7” D X 9” H HAMILTON BRACKET

ITEM NO.: BKT03X07X09HA

FRONT VIEW

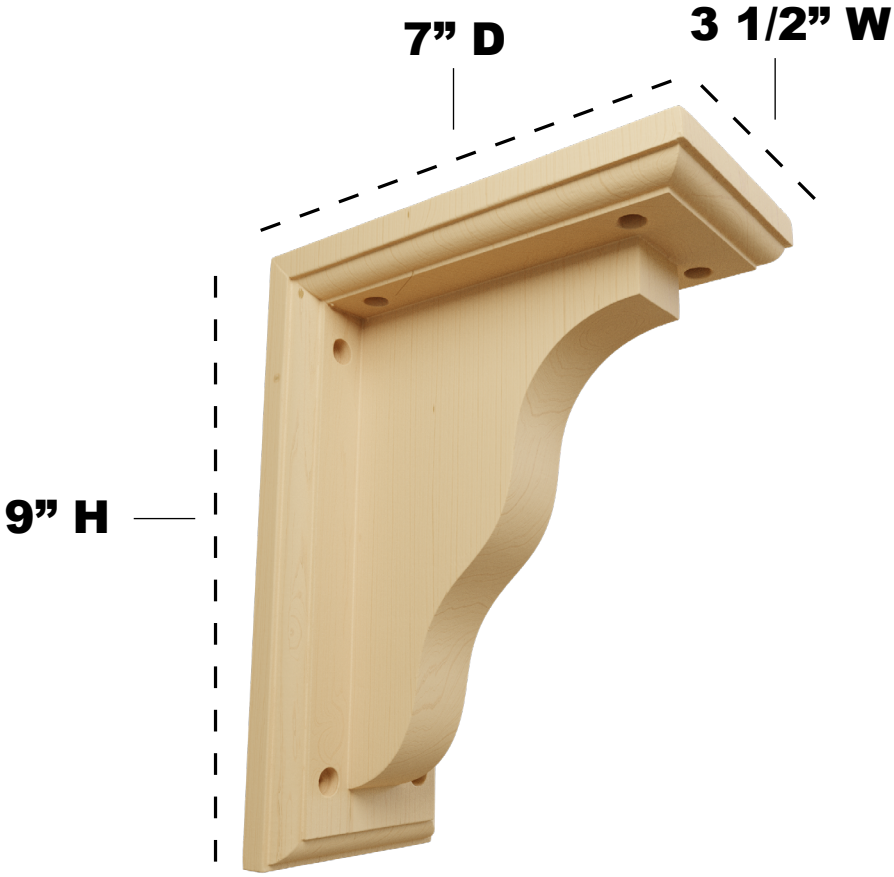

PROFILE VIEW

**AVAILABLE WOOD SPECIES:**

ALDER

CHERRY

MAPLE

RED OAK

RUBBERWOOD

EKENA MILLWORK

P:866.607.0453 | F: 866.591.3143
2300 W. Main St. | Clarksville, TX 75426
sales@ekenamillwork.com | www.ekenamillwork.com