WYNDHAM COLLECTION

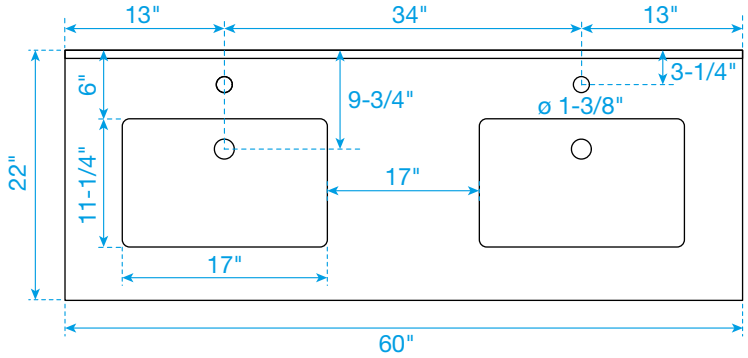

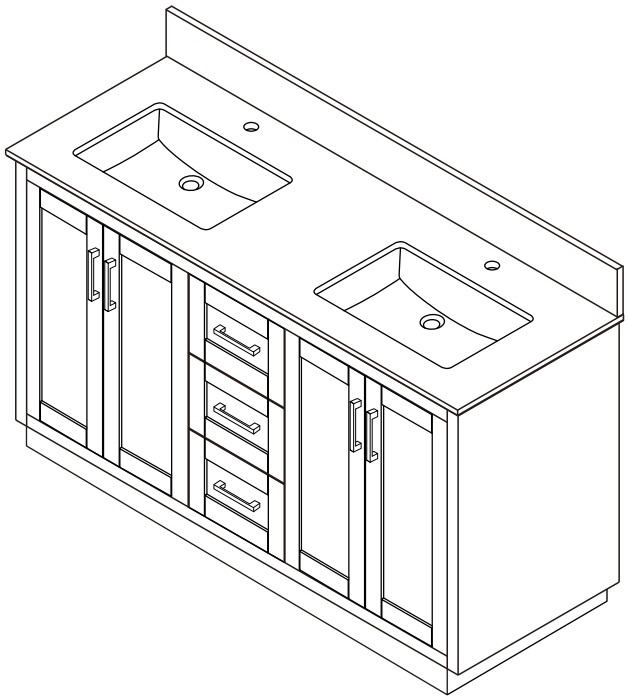

TOP VIEW OF VANITY CABINET

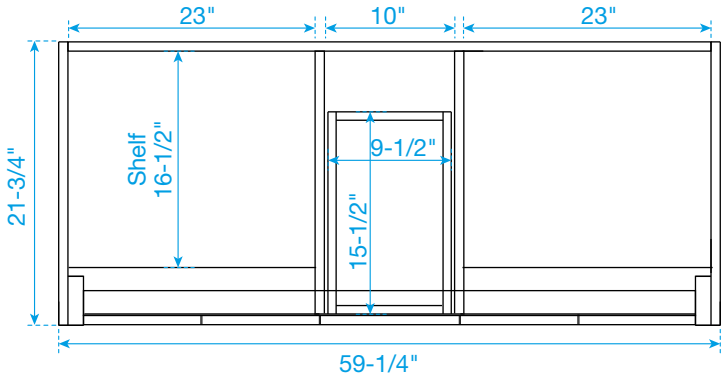

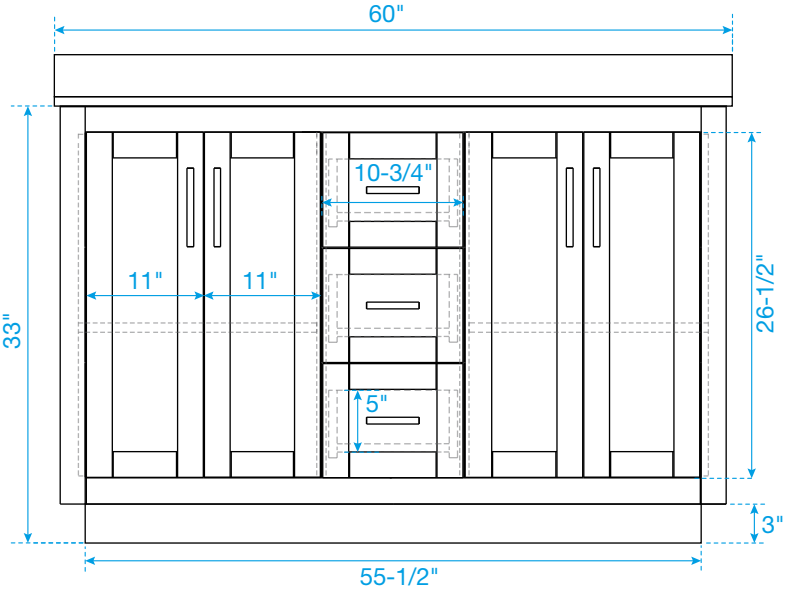

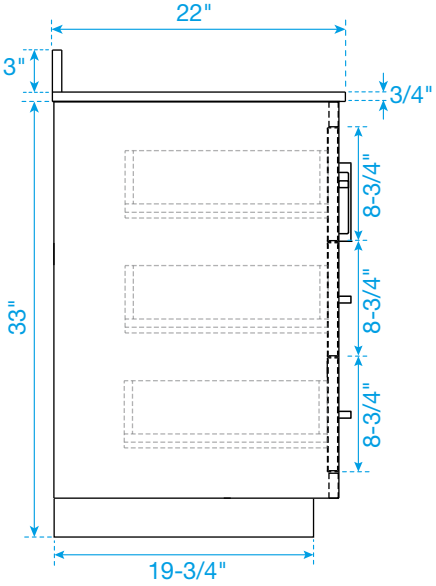

*Note: All measurements are ±1/4".

WC-2929-60-DBL
Quartz

WYNDHAM COLLECTION

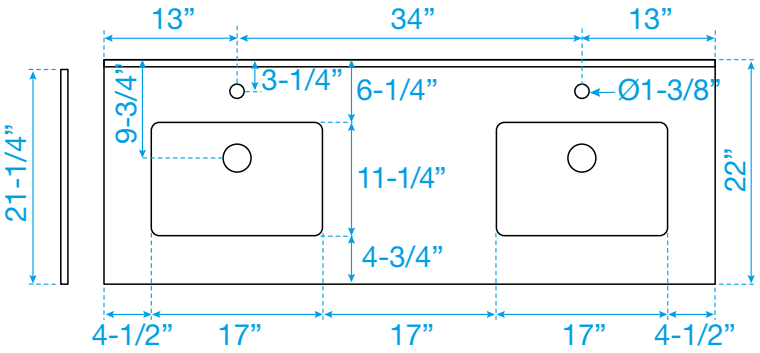

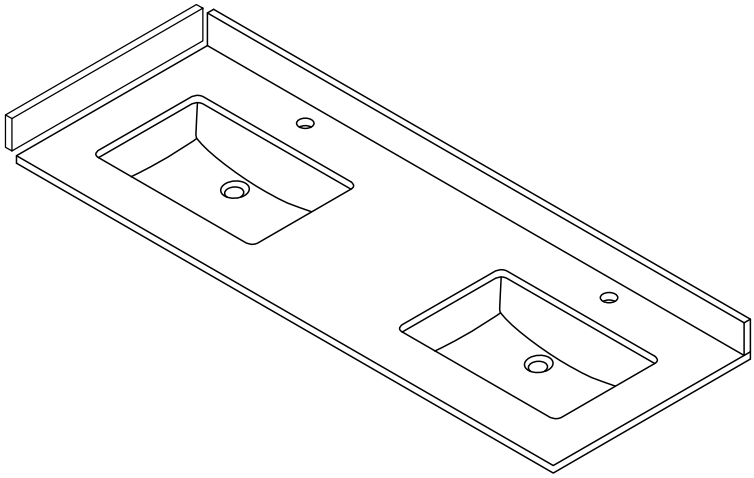

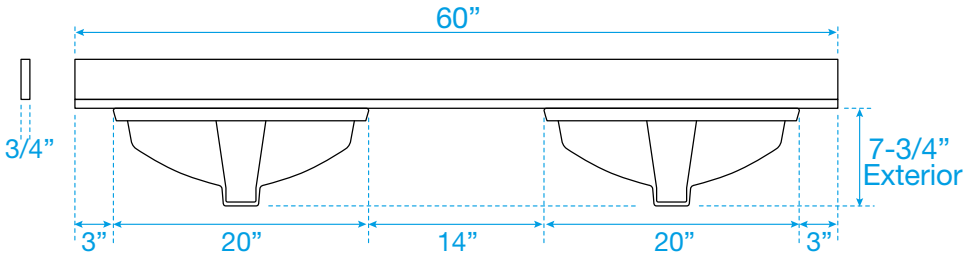

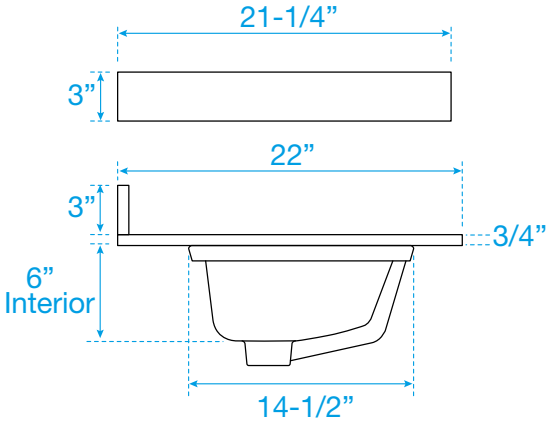

Note: Side splash is reversible. Due to high probability of breakage, the backsplash comes in two pieces, cut from the same piece. All measurements are ± 1/4”.

WC-QC1-60-DBL-TOP