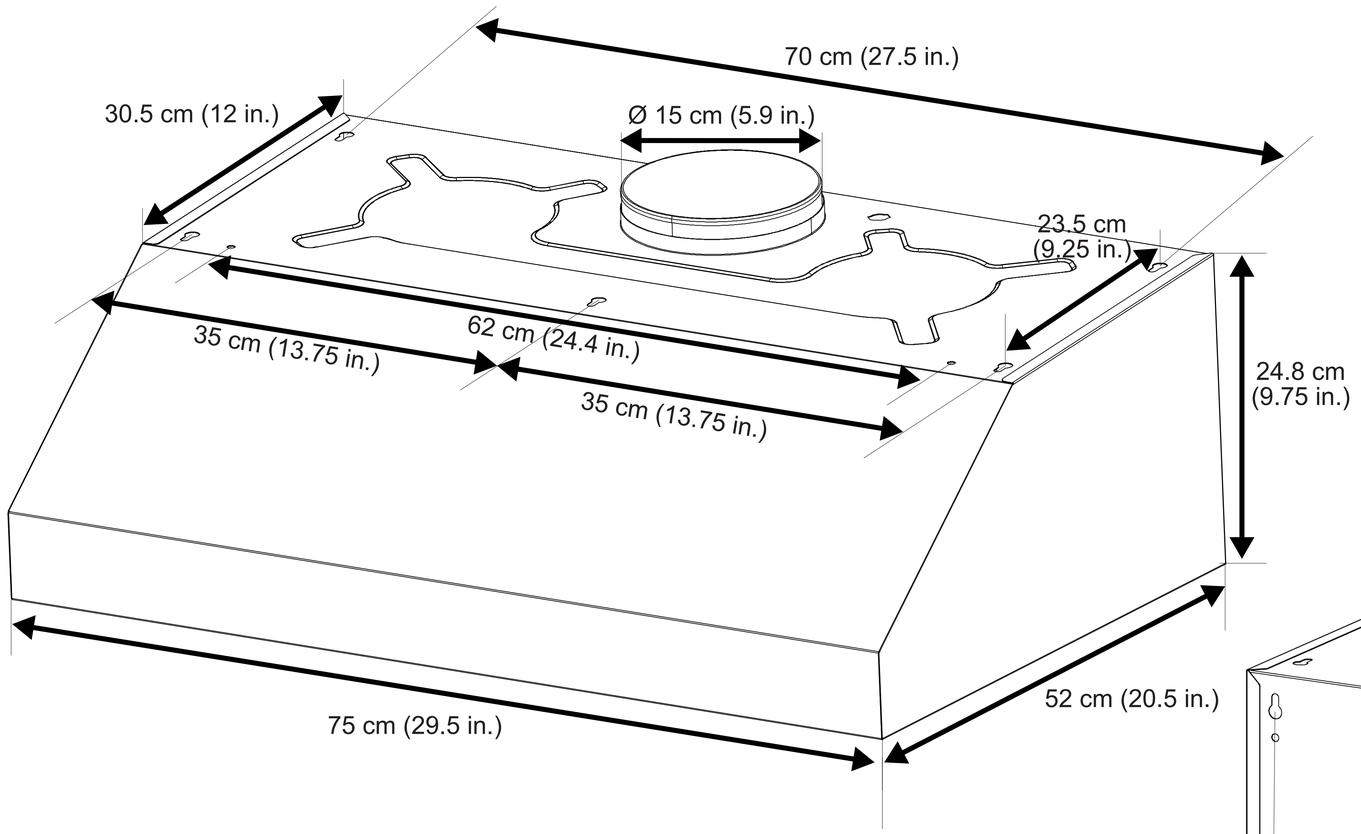
70 cm (27.5 in.)
30.5 cm (12 in.)
Ø 15 cm (5.9 in.)
23.5 cm
(9.25 in.)
35 cm (13.75 in.)
62 cm (24.4 in.)
35 cm (13.75 in.)
24.8 cm
(9.75 in.)
75 cm (29.5 in.)
52 cm (20.5 in.)

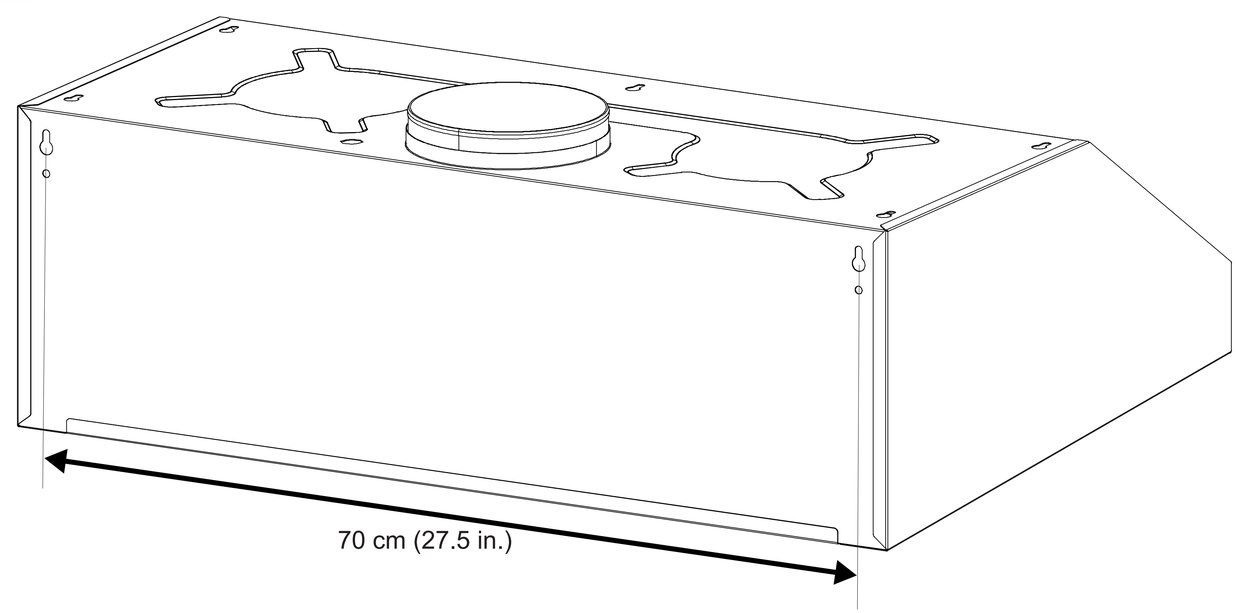
70 cm (27.5 in.)